# Water Design and Construction Standards

The Waterworks District Standards and Plates are currently undergoing major revisions.
To request the latest, please send and email to Rob Herr or Jay Lukiewski

## Ventura County Waterworks District No. 8

CITY OF SIMI VALLEY

DEPARTMENT OF PUBLIC WORKS
2929 Tapo Canyon Road
Simi Valley, CA 93063

CITY OF
SIMI VALLEY

January 27, 2004

SUBJECT: VENTURA COUNTY WATERWORKS DISTRICT NO. 8, "WATER DESIGN AND CONSTRUCTION STANDARDS" – AMENDMENT OF VALVE SEATS MATERIAL

To Whom It May Concern:

This letter serves as an amendment to the Ventura County Waterworks District No. 8 (District), "Water Design and Construction Standards" adopted by the Board of Directors in June of 1999.

Over the last several years, with the introduction of chloramines for disinfection, the District has observed problems with substantially higher rates of elastomer degradation in valves and other water related fittings. American Water Works Association research has shown that chloramines are significantly more aggressive to elastomers than the equivalent concentrations of free chlorine. Elastomers most susceptible to attack are those formulated with natural isoprene or synthetic isoprene derivatives.

As a result of the aforementioned, the District shall require all seat and wedge components of valves to be constructed of Peroxide cured Ethylene-Propylene Diene Monomer (EPDM).

Sincerely,

Timothy P. Nanson
Director of Public Works/District Engineer

CITY OF
SIMI VALLEY

May 6, 2004

SUBJECT: VENTURA COUNTY WATERWORKS DISTRICT NO. 8, "WATER DESIGN AND CONSTRUCTION STANDARDS" – AMENDMENT TO AIR VACUUM & RELEASE ENCLOSURE AND WATER SAMPLE STATION ENCLOSURE

To Whom It May Concern:

This letter serves as an amendment to the Ventura County Waterworks District No. 8 (District), "Water Design and Construction Standards" (Standards), adopted by the Board of Directors in June of 1999.

Effective immediately, the District will no longer accept steel enclosures for the combination air release and vacuum valve assemblies, and water sample stations as indicated on Plates 13 and 26 of the Standards.

The new enclosures shall be:

- Armorcast Air Vacuum Valve Enclosure P6002002, Sandstone;
- Armorcast 12" x 36" Water Testing Station Enclosure, Sandstone;

or an approved equivalent.

Enclosed herewith are revised Plates 13 and 26 for insertion into your Standards.

Sincerely,

Joe Deakin
Assistant Director of Public Works/District Engineer

# TABLE OF CONTENTS


**SECTION** **PAGE**

**1.0 INTRODUCTION AND GENERAL POLICIES.....1-1**

1.1 SCOPE.....1-1
1.2 INTERPRETATION.....1-1
1.3 DEFINITIONS AND TERMS.....1-1
1.4 APPLICABLE CODES AND POLICY.....1-10
1.5 PUBLIC VS. PRIVATE (WELLS) WATER SERVICE.....1-10
1.6 GENERAL METER POLICY.....1-11
1.7 DISTRICT METER POLICY.....1-11
1.8 FIRE PROTECTION WITHIN DISTRICT.....1-11
1.9 WATER PURVEYORS WITHIN CITY.....1-11
1.10 DEVELOPER'S ENGINEER'S RESPONSIBILITY.....1-12
1.11 REFERENCED SPECIFICATIONS.....1-12
1.12 OCCUPANCY/WATER SERVICE.....1-12
1.13 BOARD OF DIRECTORS ACCEPTANCE.....1-13
1.14 METRIC UNITS.....1-13

**2.0 DESIGN CRITERIA.....2-1**

2.1 DISTRICT WATER SYSTEM.....2-1
2.2 WATER MAIN PRESSURES, CAPACITIES AND SIZES.....2-1
2.3 SELECTION OF PIPE TYPES AND CLASS.....2-7
2.4 LOCATION OF LINES AND FIRE HYDRANTS (STREETS).....2-8
2.5 LOCATION OF LINES (EASEMENTS.....2-10
2.6 DEPTH OF WATER MAINS.....2-11
2.7 LOCATIONS AND SIZE OF VALVES.....2-11
2.8 AIR AND VACUUM ASSEMBLIES.....2-11
2.9 BLOW-OFF ASSEMBLIES.....2-12
2.10 DESIGN FOR PROPER FLUSHING.....2-13
2.11 HORIZONTAL AND VERTICAL CURVES.....2-13
2.12 PROPER SIZING OF WATER METERS AND SERVICE LINES.....2-14
2.13 LOCATION OF METER BOXES, FIRE HYDRANTS AND AIR RELEASE ASSEMBLIES.....2-17
2.14 STRUCTURAL REQUIREMENTS.....2-18
2.15 SPECIAL CONSIDERATIONS FOR WELDED STEEL PIPE.....2-20
2.16 FIRE SERVICE LINES.....2-20
2.17 OTHER DESIGN CONSIDERATIONS.....2-20

**3.0 MATERIALS.....3-1**

3.1 GENERAL REQUIREMENTS.....3-1
3.2 TESTING AND FINAL ACCEPTABILITY OF MATERIAL.....3-1
3.3 MAIN LINE PIPE MATERIALS.....3-1
3.4 MAIN LINE FITTINGS.....3-6
3.5 SERVICE LINE MATERIALS AND FITTINGS.....3-9

# TABLE OF CONTENTS


**SECTION** **PAGE**

3.6 METER BOXES AND VALVES ..... 3-11
3.7 WATER METERS ..... 3-11
3.8 MAIN LINE VALVES ..... 3-11
3.9 COMBINATION AIR RELEASE ASSEMBLIES (PLATE NOS. 13 & 14) 3-16
3.10 BLOW-OFF ASSEMBLIES (PLATE Nos. 11 AND 12) ..... 3-17
3.11 FIRE HYDRANT ASSEMBLIES (PLATE NO. 9) ..... 3-18
3.12 PIPE TRENCH MATERIALS ..... 3-19
3.13 ROADWAY MATERIALS ..... 3-19
3.14 CONCRETE MATERIAL ..... 3-19
3.15 REINFORCING STEEL ..... 3-19
3.16 PAINTING ..... 3-20
3.17 MARKER POSTS ..... 3-22

**4.0 PLAN PREPARATION ..... 4-1**

4.1 GENERAL ..... 4-1
4.2 SHEET SIZE AND MARGINS ..... 4-1
4.3 SIGNATURE BLOCK ..... 4-1
4.4 COVER SHEET ..... 4-1
4.5 PLAN OF WATER SYSTEM ..... 4-3
4.6 PROFILE OF WATER SYSTEM ..... 4-4
4.7 GRAPHIC SCALES AND NORTH ARROW ..... 4-4
4.8 PROCEDURE FOR APPROVAL ..... 4-4
4.10 STANDARD LANGUAGE FOR DEDICATION OF FACILITIES TO THE DISTRICT ..... 4-6
4.11 STANDARD NOTES ..... 4-7

**5.0 FEES, CHARGES AND REQUIREMENTS FOR AUTHORIZATION OF CONSTRUCTION ..... 5-1**

5.1 GENERAL ..... 5-1
5.2 PLAN CHECK FEE ..... 5-1
5.3 SUBMITTAL OF BLUELINE PRINTS (PLAN CHECK) ..... 5-1
5.4 SPECIAL PROVISIONS ..... 5-1
5.5 INSPECTION FEE ..... 5-2
5.6 EASEMENTS ..... 5-2
5.7 AGREEMENTS, BONDS AND INSURANCE CERTIFICATES ..... 5-2
5.8 WATER "WILL SERVE" LETTER ..... 5-3
5.9 APPROVAL FOR CONSTRUCTION ..... 5-3
5.10 CAPITAL IMPROVEMENT CHARGE ..... 5-4
5.11 SERVICE LINE, FIRE HYDRANT OR METER INSTALLATION ..... 5-4
5.12 MAIN LINE EXTENSION AND OVERSIZING AGREEMENTS AND LOCAL SHARES ..... 5-4
FEES FOR PLAN CHECKING AND TESTING OF BACKFLOW DEVICES ..... 5-4

# TABLE OF CONTENTS


**SECTION** **PAGE**

**6.0 CONSTRUCTION STAKING ..... 6-1**

6.1 GENERAL REQUIREMENTS ..... 6-1
6.2 PRESERVATION OF STAKES ..... 6-1
6.3 SERVICE LINES ..... 6-1
6.4 "AS-BUILT" ..... 6-1

**7.0 CONSTRUCTION ..... 7-1**

7.1 GENERAL REQUIREMENTS ..... 7-1
7.2 PERMITS ..... 7-3
7.3 SHIPMENT AND DELIVERY ..... 7-3
7.4 CLEARING AND GRUBBING ..... 7-4
7.5 UTILITIES, EXISTING FACILITIES AND CONCRETE REMOVAL ..... 7-4
7.6 EXCAVATION AND TRENCHING ..... 7-5
7.7 PIPE BEDDING AND LAYING ..... 7-7
7.8 THRUST BLOCKS, SUPPORTING OF VALVES, ETC. ..... 7-13
7.9 HOT TAPPING ..... 7-16
7.10 SERVICE CONNECTIONS AND SERVICE LINES ..... 7-16
7.11 INSTALLATION OF VALVES AND FITTINGS ..... 7-16
7.12 INSTALLATION OF AIR RELEASE AND BLOW-OFF ASSEMBLIES .. 7-17
7.13 INSTALLATION OF FIRE HYDRANT ASSEMBLIES ..... 7-17
7.14 INSTALLATION OF METER BOXES, PRESSURE REGULATORS ..... 7-18
7.15 BACKFILL AND COMPACTION ..... 7-19
7.16 RESURFACING AND RESTORATION ..... 7-21
7.17 BORING AND JACKING OPERATIONS ..... 7.21
7.18 CONCRETE AND MORTAR WORK ..... 7-23
7.19 CONSTRUCTION WATER ..... 7-23
7.20 PAINTING ..... 7-24
7.21 SAFETY ..... 7-24

**8.0 ABANDONMENT ..... 8-1**

8.1 GENERAL ..... 8-1
8.2 WATER LINES ..... 8-1
8.3 STRUCTURES ..... 8-1
8.4 SERVICE LINE ..... 8-1

**9.0 TESTING AND DISINFECTING WATER MAINS ..... 9-1**

9.1 GENERAL ..... 9-1
9.2 HYDROSTATIC TESTING ..... 9-1
9.3 ROLE OF FLUSHING ..... 9-3
9.4 DISINFECTING WATER MAINS ..... 9-4
9.5 BACKFILL MATERIALS ..... 9-6

# TABLE OF CONTENTS

**SECTION** **PAGE**

9.6 TESTING FOR FIRE FLOW OR PRESSURE ..... 9-6

**10.0 WATER SYSTEM AND WORK AREA CLEAN-UP ..... 10-1**

10.1 FINAL PROJECT CLEAN-UP ..... 10-1

**11.0 REQUIREMENTS FOR FINAL ACCEPTANCE ..... 11-1**

11.1 GENERAL ..... 11-1
11.2 FIELD ACCEPTANCE ..... 11-1
11.3 "AS-BUILT" ORIGINALS ..... 11-1
11.4 NOTICE OF COMPLETION ..... 11-2
11.5 GRANT DEED ..... 11-2
11.6 ITEMIZED COST/ADDITIONAL FEES ..... 11-2
11.7 OTHER ADMINISTRATIVE ITEMS/INCLUDING EASEMENTS ..... 11-2
11.8 FIFTY PERCENT OCCUPANCY ..... 11-2
11.9 APPROVAL FOR ACCEPTANCE ..... 11-3
11.10 STATUS DURING MAINTENANCE AND GUARANTEE PERIOD ..... 11-3
11.11 EXONERATION OF SURETY ..... 11-3

**12.0 CROSS CONNECTIONS & BACKFLOW PREVENTION ..... 12-1**

12.1 GENERAL ..... 12-1
12.2 JURISDICTION, AUTHORITY, REFERENCES ..... 12-1
12.3 TYPES OF BACKFLOW PREVENTION ..... 12-2
12.4 REQUIREMENTS ..... 12-3
12.5 INSTALLATION ..... 12-4
12.6 APPROVED DEVICES ..... 12-5
12.7 TESTING AND MAINTENANCE ..... 12-5

**13.0 RESERVOIRS, PUMPING STATIONS AND WELLS ..... 13-1**

13.1 GENERAL ..... 13-1
13.2 RESERVOIR STORAGE ..... 13-1
13.3 RESERVOIR STRUCTURAL DESIGN ..... 13-2
13.4 GENERAL RESERVOIR DESIGN PARAMETERS ..... 13-2
13.5 PUMPING STATION DESIGN ..... 13-2
13.6 SCADA SYSTEM ..... 13-3
13.7 FACILITY SCREENING AND PAINTING ..... 13-3
13.8 WATER WELLS ..... 13-4

**14.0 STANDARD PLATES ..... 14-1**

## RECORD OF REVISIONS

| REVISION NO. | REVISION DATE | SHEET NUMBERS REVISED | DATE ENTERED |
|---|---|---|---|
| 00-1 | 31 JAN 00 | Pages: V, IV, 3-8, 3-18, 3-19, 3-20, 13-3, 13-4, 13-5, 14-1<br>Standard Plates: 1, 4, 11, 13, 14 (Sht. 1 of 5), 15, 19, 20, 26 | |
| 02-1 | 15 NOV 02 | Pages: I through III, VI, 2-1 through 2-20, 3-1 through 3-22, 4-1 through 4-6, 7-3, 7-4, 7-7, 7-8, 7-11 through 7-22, 9-3 through 9-6.<br>Standard Plates: 9, 11, 12, 13 (Sheet 2 of 2), 18 | |
| 03-1 | 30 APR 03 | Pages: VI, 2-1, 2-2, 2-7, 2-8, 2-15 through 2-18 | |
| | | | |
| | | | |
| | | | |
| | | | |
| | | | |
| | | | |
| | | | |
| | | | |
| | | | |
| | | | |
| | | | |
| | | | |
| | | | |
| | | | |
| | | | |
| | | | |
| | | | |

# SECTION 1.0
# INTRODUCTION AND GENERAL POLICIES

## 1.1 SCOPE

The design and construction of water mains and other appurtenances in the Ventura County Waterworks District No. 8 (District) shall comply with these standards herein called "Water Design and Construction Standards", or the permit requirements of various governing bodies, except where specific modifications have been approved, in writing, by the Director of Public Works. All submitted plans shall be signed by a registered civil engineer and all work shall be in accordance with good engineering practice. This document sets forth the procedure for designing and preparing plans and specifications for water systems built for the District. Wherever there are differences between these standards and other county, state or federal regulations, the most stringent or highest requirement shall govern. Specifications and plates relating to pipelines are intended for pipes up to and including 18 inches (450 mm) in diameter.

These Standards compliment the City of Simi Valley Municipal Code, Title 9, entitled "Planning and Zoning."

## 1.2 INTERPRETATION

The Director of Public Works shall decide all questions of interpretation of "good engineering practice" being guided by the various standards and manuals to include those published by the American Waterworks Association (AWWA).

## 1.3 DEFINITIONS AND TERMS

Whenever in these specifications or in any documents or instruments where these specifications govern, the following terms, abbreviations or definitions are used, the intent and meaning shall be interpreted as follows:

### Abbreviations

| | | |
|---|---|---|
| AASHTO | - | American Association of State Highway and Transportation Officials. |
| ACI | - | American Concrete Institute. |
| ANSI | - | American National Standards Institute |
| API | - | American Petroleum Institute |
| ASCE | - | American Society of Civil Engineers. |
| ASTM | - | American Society for Testing and Materials. |
| AWWA | - | American Water Works Association. |
| DOHS | - | State of California Department of Health Services |
| UBC | - | Uniform Building Code. |
| UPC | - | Uniform Plumbing Code. |
| VCFPD | - | Ventura County Fire Protection District |

Pipe Types:

| | | |
|---|---|---|
| AC | - | Asbestos Cement. |
| CI | - | Cast Iron. |
| CMP | - | Corrugated Metal Pipe. |
| DIP | - | Ductile Iron Pipe. |
| CMC | - | Cement Mortar Coated Steel Pipe. |
| CMCL | - | Cement Mortar Coated and Lined Steel Pipe. |
| PB | - | Polybutylene. |
| PE | - | Polyethylene. |
| PVC | - | Poly-Vinyl Chloride. |
| RC | - | Reinforced Concrete. |

## Definitions

| | |
|---|---|
| "Acceptance" | Field acceptance is when the District inspector approves the physical installation of the water system. Board of Director's acceptance or final acceptance follows field acceptance and is when the Board of Directors approves both physical improvements as well as the administrative items associated with development, accepts ownership and operation and maintenance (O & M) responsibilities. |
| "Applicant" | An individual or organized group, partnership, corporation, etc., proposing to subdivide or improve land that will require water from the District's system. |
| "Approved" | Unless specifically otherwise indicated, this shall mean approval by the District Engineer. |
| "Backbone Pipeline" | A main pipeline that delivers flow to a main section of the service area. |
| "Board of Directors" | The Board of Directors of the Ventura County Waterworks District No. 8. |
| "City" | The City of Simi Valley, California |
| "County" | The County of Ventura, California |
| "Developer" | An individual or organized group, partnership, corporation, etc., proposing to subdivide or improve land that will require water from the District's system. |
| "Developer's Engineer" | The engineer licensed by the State of California as a civil engineer employed by developer, under whose direction construction plans, profiles and details for the work are prepared and submitted to the District and/or City for review and approval. |

| | |
|---|---|
| "Director" | Director shall mean the Director of Public Works of the City, or the person(s) engaged by the City and authorized to perform the duties assigned to the Director of Public Works, and shall include his/her deputies and representatives. |
| "District" | The Ventura County Waterworks District No. 8. |
| "District Engineer" | A registered civil engineer employed by the District and designated by the Director to act on the District's behalf. |
| "Engineer" | A professional engineer or firm of professional civil engineers appointed by and acting for the District Engineer in the case of a District sponsored capital project. In the case of a developer sponsored project, the term refers to the engineer hired by the developer and may also be referred to as "developer's engineer". |
| "Fire Department" | Ventura County Fire Protection District. |
| "Fire Service Line" | A line whose sole function is to service a particular building or property with fire protection. |
| "House Plumbing" | Plumbing fixtures, devices, and piping within a building or structure including pipes on the property from the meter. |
| "Inspector" | An employee or agent of the District engaged to observe and record field compliance with design criteria, plans and construction standards. |
| "Offsite" or "Off-Tract Water Line" | A water line beyond tract boundaries connecting the water lines with the District's system. |
| "Plans" | Drawings of water pipelines, reservoirs, pump stations, wells, valves and details. |
| "Plate No." | Where not specified to the contrary, this refers to plates attached to these standards. |
| "Pressure Zone" | The zone within the District system as defined by the elevation, i.e., Zone II, el. 1,090; same as service zone. |
| "Public Works Department" | The department established by the City to administer the public infrastructure systems. |
| "Required" | Unless specifically otherwise indicated, this shall mean a requirement of the District. |
| "Required Fire Flow" | A requirement established for each project as determined by the VCFPD using Insurance Services Office guidelines. |

| | |
|---|---|
| "Service Lines" | The line between the main pipeline and the meter within public right-of-way. |
| "Service Zone" | See pressure zone. |
| "Sewer" or "Sewerage" | Wastewater main or wastewater. |
| "Tract Water Lines" | The system of water lines and service lines constructed by a developer within an approved tract. |
| "Water Department" | The terms pertaining to the personnel and activities within the Ventura County Waterworks District No. 8 who (that) are responsible for providing water service. |
| "Water Division" | See Water Department. |
| "Water Main" or "Main Line" | The water pipeline system usually consisting of pipelines 6-inches and larger, that supplies water to the service lines, fire hydrants, or fire service lines. |
| "Water Purveyor" | Agency or company supplying water. |

## 1.4 APPLICABLE CODES AND POLICY

A. Ordinances, requirements and applicable standards of governmental agencies having jurisdiction within the District's service area shall be observed in the design and construction of water systems. Such requirements include but are not limited to current revisions of the following:

1. The American Water Works Association Standards

2. The Uniform Plumbing Code as amended by the City of Simi Valley Building and Safety Division.

3. Road encroachment regulations of the City of Simi Valley or the County of Ventura, as applicable.

4. Standard Specifications - State of California Business and Transportation Agency, Department of Transportation Standard Specifications, current edition (CALTRANS), or Building News, Inc. (BNI) publication entitled "Standard Specifications for Public Works Construction," (commonly known as the "Greenbook") current edition and supplements.

## 1.5 PUBLIC VS. PRIVATE (WELLS) WATER SERVICE

It is District policy to require connection to the public water system. However, in special cases, approval to use well water may be granted by the District Board after review of a well permit application, and the applicant obtains written approval from the VCFPD that the VCFPD

requirements are met as well as those agencies responsible for health and potability considerations. The District's approval to construct or utilize a well shall not assure the applicant that a continued good quality, good water source of will be available in the future. Wells shall be constructed in accordance with the City of Simi Valley WELL ORDINANCE.

## 1.6 GENERAL METER POLICY

Unless otherwise approved by the Board of Directors, a separate water meter shall be installed for each single owner, single tenant residential property, such as detached single-family homes, townhouses, or condominiums. Single ownership, multiple tenant multi-family dwellings such as apartment buildings or apartment complexes shall be master metered at all points of connection to the District's system.

Unless otherwise approved by the Board of Directors, single ownership, multiple tenant commercial developments, shall be master metered at all points of connection to the District's system. A separate water meter shall be installed for each single owner single tenant commercial property.

## 1.7 DISTRICT JURISDICTION

The District is responsible for the approval of plans and inspection of all public main water lines and service lines within the public right-of-way and easements of the District's water service area. The Building and Safety Division City of Simi Valley, is responsible for all systems beyond the water meter or backflow prevention device. Outside of the City limits, the Ventura County Building and Safety Department has jurisdiction. Where repairs or replacement of a service line on the District's side of the meter is required subsequent to initial construction, it shall be the responsibility of the District unless it is an upgrade situation in which case the owner or customer shall post a cash bond for the work prior to start of construction and will be credited or billed for the actual costs incurred by the District for the work. Conversely, repairs or replacement on the customer side of the meter shall be the responsibility of the property owner.

Inspection responsibility above the pipe zone (trench and pavement) in public street areas rests with the Public Works Department, either City or County, as appropriate.

## 1.8 FIRE PROTECTION WITHIN DISTRICT

Within the District and surrounding Ventura County areas, fire protection is provided by the VCFPD although all water systems are owned by the water purveyor or are private. Fire protection services are by contract with the District.

## 1.9 WATER PURVEYORS WITHIN CITY

Within the City there are two water purveyors as follows:

- Ventura County Waterworks District No. 8
- Southern California Water Company

These standards address Ventura County Waterworks District No. 8 requirements.

## 1.10 DEVELOPER'S ENGINEER'S RESPONSIBILITY

These standards establish uniform policies and procedures for the design and construction of the District water system. They are not intended to be a substitute for engineering knowledge, judgment, or experience. The contained procedures shall be reviewed by the developer's engineer and shall be applied as necessary to the project. Proposed deviations to these standards shall be submitted, in writing, prior to tentative map and/or development project approval.

It is the developer's engineer's responsibility to be aware of the District's Water System Master Plan and/or any applicable specific plan for water system improvements and to indicate any main line relocations, extensions or oversizing on the tentative tract map. This responsibility shall include investigating any changes from the Master Plan necessitated by development subsequent to the Master Plan, although the above shall not relieve the developer from the responsibility to provide an approved system consistent with District requirements. Verification of the adequacy of the surrounding water system rests jointly with the District Engineer and the developer.

All plans, specifications, reports or documents shall be prepared by a registered civil engineer licensed by the State of California Department of Consumer Affairs, or by a subordinate employee under the civil engineer's direct supervision, and shall be signed and stamped with the civil engineer's seal to indicate responsibility for each plan, specification, report or document.

A "Preliminary Review" and/or "Plans Approved for Construction" stamp or signature of the District Engineer on the plans does not in any way relieve the developer's engineer's responsibility to meet all of the District's requirements. The plans shall be revised or supplemented at any time it is determined by the District Engineer that the District's requirements have not been met. However, generally plans that are signed as being authorized for construction will not require revisions based upon subsequent revisions to these standards unless in the District's opinion a change is necessary based upon a significant change in the standards or unless a developer does not proceed to construction within the time allowed in the agreement with the District.

## 1.11 REFERENCED SPECIFICATIONS

References to standards such as AWWA or ASTM shall refer to the latest edition or revision of such standards unless otherwise specified.

## 1.12 OCCUPANCY/WATER SERVICE

As a part of the clearance procedure for individual house/ building occupancy, the District must "clear" the house/building. Occupancy cannot be given until the public water system is field accepted by the District inspector working with the District's operations & maintenance personnel. For tract construction where numerous units are involved, clearances will be granted on a street-by-street basis only; individual clearances on a piecemeal basis will not be made.

## 1.13 BOARD OF DIRECTORS ACCEPTANCE

The District will not recommend that a water system be accepted until all applicable requirements of these standards and of the appropriate Public Works Department have been met. That includes the requirement that at least 50 percent of all homes or buildings be constructed and occupied or at least 75 percent of all buildings or houses be under construction.

## 1.14 METRIC UNITS

These standards contain metric conversions where applicable for convenience, however all size call outs are not necessarily included.

# SECTION 2.0
# DESIGN CRITERIA

## 2.1 DISTRICT WATER SYSTEM

The District is one of two water purveyors within the City of Simi Valley. The other is the Southern California Water Company. The District's service area generally includes the City of Simi Valley's Sphere of Influence. The District should be consulted concerning the exact boundaries and current Water Master Plan of its service area. The service area consists of five operating sub-systems: 1) Western; 2) Eastern; 3) Knolls; 4) Box Canyon; and 5) Wood Ranch.

The District purchases most of its water from the Calleguas Municipal Water District who, in turn, purchases water from the Metropolitan Water District (MWD). The remainder of the water is from groundwater wells located in the vicinity of Tapo Canyon.

A detailed description of the District water system is contained in the District's Water Master Plan.

## 2.2 WATER MAIN PRESSURES, CAPACITIES, AND SIZES

A. Quantity of Flow: Flow rates shall be determined from maximum potential population or land use of the area served. Flow rates are based upon the District's Water Master Plan. Flow estimates based upon rough approximations using ground slope shall not be allowed. The criteria contained in Table 2-1 shall be used for estimating the average residential water demands of proposed developments when the number of units or land use is not precisely known; otherwise the criteria contained in Table 2-1a shall be used. Residential lots larger than 1 Acre require individual demand calculations based upon a fixture count and the actual irrigated area of the lot, or other demand calculation method as approved by the District Engineer.

TABLE 2-1
AVERAGE RESIDENTIAL WATER DUTIES

| Land Use | gpm/acre* | gpd/acre* |
|---|---|---|
| Low Density ( 0-3 Units per Acre) | 1.10 | 1,584 |
| Medium Density (3.1-10 D.U./Acre) | 1.40 | 2,016 |
| High Density (10.1-18.1 + D.U./Acre) | 5.70 | 8,208 |

* Factor shall be applied to raw acreage with no deduction for opens space, roads, easements, etc.

TABLE 2-1a
AVERAGE RESIDENTIAL WATER DUTIES

| Land Use | gpd/unit |
|---|---|
| Detached Residential | |
| Small, Up to 9,999 SF Lot | 420 |
| Medium, 10,000 -22,000 SF Lot | 840 |
| Large, 22,001 SF- 1 Acre Lot | 1680 |
| Condominium | 259 |
| Multi-Family Apartment | 222 |
| Retirement Facility* | 92 |
| Senior Apartment | 111 |

* Per Room

Flow quantities for commercial, industrial, greenbelt areas, schools, etc., shall be the sum of the estimated flow requirements for each building and/or area within the project area. The District's Water Master Plan is the primary reference for establishing flow requirements. AWWA Manual of Practice No. M22, entitled "Sizing Water Service Lines and Meters" and the Uniform Plumbing Code may be used to estimate flow quantities for commercial, industrial, greenbelt areas, schools, or similar other projects. In the absence of a land use definition or for preliminary estimating purposes, the per/acre flow quantities listed in Table 2-2 may be used with the prior approval of the District Engineer:

TABLE 2-2
COMMERCIAL, INDUSTRIAL AND MISCELLANEOUS OTHER WATER DUTIES

| | gpm/acre | gpd/acre |
|---|---|---|
| COMMERCIAL | | |
| Light | 1.75 | 2,520 |
| Heavy | 2.35 | 3,384 |
| Office | 2.00 | 2,880 |
| INDUSTRIAL | | |
| Light | 1.95 | 2,808 |
| Heavy | 9.20 | 13,248 |
| Business Park | 2.00 | 2,880 |
| PUBLIC & SEMI-PUBLIC | | |
| Parks | 1.10 | 1,584 |
| Hospitals | 1.85 | 2,664 |
| Schools | 1.20 | 1,728 |
| Community Services | 1.35 | 1,944 |

The following peaking factors shall be used to determine the system demands during conditions that exceed the average daily flow:

TABLE 2-3

| Demand | Multiply Average Daily Flow by Factor Shown |
|---|---|
| Maximum Day | 2.15 |
| Peak Hour | 4.50 |

If and when special studies of a particular area are conducted that demonstrate that different water use or peaking factors are appropriate, then those values may be used if approved by the District Engineer.

B. Fire Flow Requirements: The District generally follows the requirements of the Insurance Service Office (ISO) as might be modified upwards by the current District Water Master Plan or the VCFPD, that provides fire protection service within the District. Table 2-4 lists the fire flow requirements that the District has adopted and set forth in the District's Water Master Plan.

TABLE 2-4
RECOMMENDED FIRE FLOWS

| Land Use Category | Fire Flow (gpm) | Duration (hrs) |
|---|---|---|
| RESIDENTIAL | | |
| Residential Estate, Very Low, Low Density (0-3 D.U./Acre) | 1500 [(a)] | 4 |
| Medium, Intermediate, Mobile Home, Mobile Home Subdivision Density (3.1-10 D.U./Acre) | 1500 | 4 |
| High, Very High Density (10.1-18.1 + D.U./Acre) | 2500 | 4 |
| COMMERCIAL | | |
| Recreational, Commercial, Office, General, District, Sub-Regional, Railroad Depot | 3500 | 4 |
| INDUSTRIAL | | |
| Light Industrial, Business Park, Industrial Reserve, Airport | 4500 | 4 |
| PUBLIC & SEMI-PUBLIC | | |
| Community Service [(b)] | 3500 | 4 |
| Parks | 1500[(a)] | 4 |
| Hospitals | 3500 | 4 |
| Schools - Elementary | 2000 | 4 |
| - Junior High and Special Education | 2500 | 4 |
| - Senior High | 3000 | 4 |

D.U. = Dwelling Unit

1. Ventura County Waterworks District No. 8 specifies a minimum fire flow of 1500 gpm for 4 hours.

2. Community Service includes Civic Center, Public Services Center, Fire Station, Law Enforcement Office, Library, Churches, Cemetery, Brandeis-Bardin Institute, and Sanitary Landfill.

Excerpts from the current ISO standards are presented below and are not intended to be all inclusive. These excerpts may be used as a guideline recognizing that specific requirements are set by the VCFPD and the District.

The basic formula for determining fire flow is:

$$NFF_i = (C_i)(O_i)(X + P)_i$$

Where:

| | | |
|---|---|---|
| $C_i$ | = | Construction factor |
| $O_i$ | = | Occupancy factor |
| $X_i$ and $P_i$ | = | Exposure and communication factors |
| Subscript "i" | = | Allows averaging buildings where a different factor is assigned to different portions. |

The factors are determined as follows:

$$C_i = 18F(A_i)05$$

Where:

| | | |
|---|---|---|
| $C_i$ | = | Fire flow attributed to building size and construction type |
| | = | Coefficient related to the class of construction: |
| | = | 1.5 for Construction Class 1 (Frame) |
| | = | 1.0 for Construction Class 2 (Joisted Masonry) |
| | = | 0.8 for Construction Class 3 (Non-Combustible) and Construction Class 4 (Masonry Non- Combustible) |
| | = | 0.6 for Construction Class 5 (Modified Fire Resistive) and Construction Class 6 (Fire Resistive) |
| $A_i$ | = | Effective Area |
| $O_I$ | = | A factor between 0.75 and 1.25 with the higher values for rapid burning occupancy materials. |
| $X_i$ and $P_i$ | = | Factors that reflect the influence of exposed and communicating buildings. It relates to the possibility of spreading fires and the term $(X+P)_i$ can vary between 1.0 and 1.75. |

All fire flow shall be provided from storage tanks. The use of fire pumps to meet fire flow shall not be allowed unless authorized by the District Engineer.

The installation of sprinklers in a building can greatly reduce the needed fire flow. Consult the VCFPD and the City of Simi Valley Building and Safety Division for details.

For single-family residences not exceeding 2 stories in height, the minimum fire flow requirement shall be no less than 1,500 gpm (95L/S). The determination of the required fire flow shall be in accordance with the ISO standards and shall not be diminished by consideration of practices outside the District's water service area.

The fire flow duration shall be a minimum of four (4) hours for all needed fire flows (NFF) or as otherwise directed in the District's Water Master Plan.

It is the developer's responsibility to demonstrate through calculations that the required fire flow can be met while the District's water system is under a maximum day demand. The calculations shall assume that fire flow is achieved solely from storage without reliance on turnout capacity or booster or pumping stations. Under fire flow conditions, including the maximum daily requirement; the residual pressure in the system shall be no less than 20 psi (140 KPa).

In instances of high fire flows or large or complex developments, computer analyses shall be required. Where the District performs such analyses, the developer shall be charged a fee consistent with rates referred to in Section 5 (FEE CHARGES AND REQUIREMENTS FOR AUTHORIZATION OF CONSTRUCTION).

C. Pressure: Water mains shall be designed to have at least five-psi residual pressure throughout any buried length of the main except when the main is removed from service for repairs or maintenance. Water mains shall be designed to provide for service pressures between a minimum of 40 psi and a maximum of 150 psi with the following provisions:

1. Service pressure shall mean the pressure at the house or building and shall be interpreted to be the static pressure available during a peak hour condition with the service reservoir at a hydraulic elevation equivalent to occurrence of one maximum day demand.

2. Minimum service pressure under fire flow condition shall be 20 psi. The service pressure under fire flow condition shall be calculated assuming the service area reservoir is at a hydraulic elevation equivalent to a maximum anticipated pressure zone fire event plus maximum day demand event.

3. The preferred operating service pressure range is between 45 and 80 psi. Static service pressures in excess of 80 psi requires the installation of individual pressure regulators at the house or building on the customer side of the meter.

4. Where system or service static pressures exceed 150 psi, special approval by the District Engineer is required. The developer shall install separate pressure regulators ahead of the meters or a pressure regulating station on the main line, as directed by the District Engineer.

5. Where service pressures are below 40 psi and equal to or greater than 30 psi, special approval by the District Engineer is required. The developer shall enter into a “Low

Pressure Agreement" with the District prior to "Zone Clearance". Said "Low Pressure Agreement" shall be recorded with the County Clerk at the Ventura County Recorder prior to issuance of a "Will Serve" letter and shall be fully disclosed to subsequent property owners.

D. Velocity: Water mains shall be designed to provide a mean velocity not more than five (5) feet per second (1.5 m/sec) under maximum day flow conditions.

E. Hydraulics: Pipe analysis shall be performed based on both existing and future water demands. Hydraulic calculations shall assume a Hazen-Williams coefficient "C"=120. For reference, the following can be used:

TABLE 2-5

| PIPE SIZE | HEAD LOSS IN FT/FT*(M/M IS SAME) |
|---|---|
| 6" (150 mm) | $0.0194Q^{1.85}$ |
| 8" (200 mm) | $0.00483Q^{1.85}$ |
| 10" (250 mm) | $0.00163Q^{1.85}$ |
| 12" (300 mm) | $0.000670Q^{1.85}$ |
| 14" (350 mm) | $0.000317Q^{1.85}$ |
| 16" (400 mm) | $0.000165Q^{1.85}$ |
| 18" (450 mm) | $0.0000932Q^{1.85}$ |

Using:

$$* h_L = \frac{4.727Q^{1.85}}{C^{1.85}d^{4.87})}$$

Where Q is in c.f.s. and d is in feet

F. Sizing of Mains: Water mains shall be a minimum of 8 inches (200 mm) in diameter, unless otherwise approved by the District Engineer. Exceptions are as follows:

1. Dead end mains may be 6 inches (150 mm) in diameter. A dead end line is one, that cannot and will not be extended in the future. Dead end mains shall be avoided if at all possible. All dead end mains shall be provided with a means of flushing (fire hydrant, blow-off, etc.) that is suitable to the District and is in accordance with Paragraph 64642, Article 5, Chapter 16, Division 4, Title 22, of the California Administrative entitled "Flushing Valves and Blow-offs." Whenever practical, a service meter shall be located as close as possible to the end of the Main

2. Larger size mains may be required, particularly for backbone pipelines.

G. Pipe Networks: The developer's engineer shall strive to provide multiple sources of water for any subdivision or major commercial/industrial project. Whenever practical, the use of "looped" pipe systems shall be required.

## 2.3 SELECTION OF PIPE TYPES AND CLASS

A. General: These Standards cover main lines up to and including 18 inches (450 mm) in diameter. See Section 2.2 (Water Main Pressures, Capacities & Sizes) for proper sizing of mains.

B. Main Pipelines: In general, main lines shall be either polyvinyl chloride (PVC, AWWA C-900, AWWA C-905), steel or ductile iron pipe in accordance with Sections 3 (Materials) and 7 (Construction) of these standards.

Where PVC (AWWA C900) pipe is selected, the head classes contained in Table 2-6 shall be used.

TABLE 2-6

| Static Pressure (psi) | Class of PVC Pipe* | Dimension Ratio (DR) |
|---|---|---|
| 0 - 125 | 150 | 18 |
| 126 - 175 | 200 | 14 |

* Where pipes are laid in deep trenches, the class size shall be determined using the criteria established in AWWA C-900 or AWWA C-905.

A valve, rated at the highest pressure class, shall separate all transitions between different pipe pressure classes or pipe materials. All piping used in fire hydrant runs shall be a minimum Class 200.

Steel pipe thickness shall be sufficient for the static pressure in accordance with Section 3.3 (Main Line Pipe Materials).

Ductile iron pipe shall be selected with a thickness that will be suitable for the pressure and laying condition in accordance with AWWA C-150 or as otherwise approved by the District Engineer.

C. Service Lines: Service lines shall be a minimum diameter and pipe material as described in Table 2-7. Service lines shall have a minimum pressure rating equal to or greater than the pressure rating of the associated water main. Service line material shall be a minimum type K copper as described in Sections 3.5 (Service Line Materials and Fittings) and 7.10 (Service connections and Service Lines). PVC, polyethylene, and polybutylene pipe shall not be allowed for service lines.

1. In areas where soil conditions are determined to be corrosive, special consideration for protection of the service line shall be implemented by the developer’s engineer and constructed by the contractor.

TABLE 2-7

| Service Line Size | Meter Sizes | Material |
|---|---|---|
| 1-inch | 5/8" through 1" | Type K Copper |
| 1 1/2-inch | Dual ¾" | Type K Copper |
| 2-inch | 1 1/2" through 2" | Type K Copper |
| 4-inch | 3" through 4" | Type K Copper, C-900 PVC, C-150 DI |
| 6-inch and larger | 6-inch and larger | C-900 PVC, C-150 DI |

## 2.4 LOCATION OF LINES AND FIRE HYDRANTS (STREETS)

A. Water Mains: The water main centerline, wherever possible, shall be located in public streets or public rights-of-way parallel to and 5 feet (1.5m) north or west of the street centerline. See Plate No. 4 for separation requirements between any wastewater line and water line.

Where storm drains or other facilities are in the center of the street, the water lines should be located to provide a minimum of 4 feet (1.2m) clearance between the outsides of pipe (measured on a horizontal plane). This also pertains to any case of paralleling lines.

Special care is required where storm drains or other pipes cross above flexible pipes to avoid deflection problems during construction.

When an area outside the tract or development project area may be served through a potential future extension of the water main in streets or easements, the pipeline shall extend to the tract/project boundary.

B. Fire Hydrants: Location and spacing of fire hydrants shall be in accordance with Table 2-8. Fire hydrants shall be located within 150' ± from the furthest corner of any building site. Fire hydrants shall be located a minimum of 2.0 feet behind the face of any curb as shown on Standard Plate No. 8. Whenever the location of a fire hydrant corresponds to that of a required blow-off structure, a fire hydrant shall be used in lieu of the blow-off structure. All plans shall be reviewed and approved by the VCFPD as to the adequacy of fire hydrant location and spacing.

TABLE 2-8

| TYPE OF CONSTRUCTION | SPACING |
|---|---|
| Residential single family dwelling, duplex | 500' |
| Commercial & apartments | 300' |

C. Criteria for the Separation of Water Mains and Waste-Water (Sewer) Lines:

1. General: The separation of water mains with adjoining sewers and drains, shall be in accordance with Section 64630, Title 22, California Administrative Code, entitled "California Waterworks Standards," as set forth by the Department of Health Services, State of California, Health and Welfare Agency (DOHS).

2. Basic Separation Standards:

a. Parallel Construction: The horizontal distance between pressure water mains and sewer lines shall be a minimum of 10 feet.

b. Perpendicular Construction (Crossing): Pressure water mains shall be at least one foot above sanitary sewer lines.

c. Common Trench Prohibition: Construction of water and wastewater main lines in the same (common) trench is prohibited.

3. Exceptions to Basic Separation Standards: All efforts shall be taken to comply with the above-described separation requirements. Alternative construction criteria as specified in Standard Plate No. 4 and subject to the special provisions outlined below, may be considered in exceptional cases. All exceptions to the basic separation requirement shall be approved in writing by the District Engineer. In extenuating circumstances, the District Engineer may require the engineer to submit the request to the DOHS for review and approval prior to the District granting of an exception.

4. Special Provisions:

a. The Basic Separation Standards are applicable under normal conditions for wastewater (sewage) collection lines and water distribution mains. More stringent requirements may be necessary if conditions such as high groundwater exist as determined by the engineer and/or District.

b. Wastewater lines shall not be installed within 25 feet horizontally of a low head (5 psi or less pressure) water main.

c. During construction of water and/or sewer pipelines, measures shall be taken to prevent and/or minimize disturbances existing the pipeline(s) or the existing trench section.

d. Wastewater Force Mains:

(1) Wastewater force mains shall not be installed within ten feet (horizontally) of a water main.

(2) When a wastewater force main crosses a water line, the crossing should be perpendicular. The wastewater force main should be at least one foot below the water line.

(3) When a new wastewater force main crosses under an existing water main, all portions of the wastewater force main within ten feet (horizontally) of the water main shall be enclosed in a continuous sleeve.

(4) When a new water main crosses over an existing wastewater force main, the water main shall be constructed of pipe materials with a minimum rated working pressure of 200 psi or equivalent pressure rating.

## 2.5 LOCATION OF LINES (EASEMENTS)

Easements should be avoided whenever an alternate pipeline alignment exists. Unless there are extreme physical limitations, water lines should be installed within streets or the public right-of-way. Where easements are necessary and where the side slope (perpendicular to the pipe) exceeds 25 percent (1 vertical to 4 horizontal) then the plans shall clearly indicate appropriate contours within the easement.

Pipelines located within easements shall begin and end at a valve and shall be DIP as described in Section 3.3 of these standards.

Pipelines located within an easement shall be accessible at all times by maintenance vehicles traveling over paved roads or driveways unless otherwise approved by the District Engineer.

Service lateral lines should not be connected to a main line within an easement unless specifically approved by the District Engineer.

A. Width: Water easements for pipes up to 18 inches (450 mm) in diameter shall be minimum of 20 feet wide (6.1 m). When two pipelines are located within a single easement, the easement width shall be a minimum of 30 feet (9.2 m). The District Engineer may require additional easement width where the depths of pipe are deemed excessive (deeper that eight feet) or where deemed necessary to assure adequate space to maintain and/or operate the water system.

B. Pipeline Location: Pipelines shall be located in the center of the easement, unless authorized by the District Engineer. Unless specifically otherwise approved by the District Engineer, pipelines located within an easement shall be straight without horizontal bends or deflections. Under no circumstances shall a pipeline be located within 5 feet (1.5 m) from the edge of the easement. Water pipelines located within an easement shall not be located on a property lot line.

C. Easement Location: The full easement width shall be on one lot or parcel in such a manner that access to the entire pipeline alignment will be unobstructed by walls, trees or permanent improvements. Where this requirement cannot be met without interfering with existing structures, and subject to the approval of the District Engineer, easements may straddle lot lines. The water pipeline may not be located directly on the lot lines.

D. Deeds: Deeds for easements shall prohibit permanent construction within the easement to provide ingress and egress for maintenance and/or system operation of the pipeline or other District facility.

E. Easement Provisions: Easements shall be provided as follows:

1. Subdivision Tracts: Landowners included within the subdivision shall offer to dedicate, for public use, the water easements so designated on the final map. Standard language is included in Section 4.10 (Standard Language for Dedication of Facilities to the District).

2. Other than Subdivision Tracts: Dedication of water rights-of-way shall occur by means of deeds of conveyance to the District for all dedications other than those dedications created by subdivision tract maps in a form that is acceptable to the District Engineer.

## 2.6 DEPTH OF WATER MAINS

The standard uniform minimum depth of cover to the top of the pipe shall be 42-inches (1.1 m). Increases in depth may be required where future grading for road improvements remove the existing cover or where there are other conflicting utilities.

## 2.7 LOCATIONS AND SIZE OF VALVES

All pipeline branches at intersections shall be valved unless otherwise approved by the District Engineer. All pipeline valves shall be the same nominal size as the pipeline.

In-line valves shall be required at 1,000-foot (300 m) intervals for pipelines 8-inches and smaller and at 750-foot (225 m) intervals for pipelines 10-inches and larger.

Any valve deeper than 5 feet to top of nut, shall have extensions attached to the operation nuts.

## 2.8 AIR AND VACUUM ASSEMBLIES

A. Types of Valves:

1. Air release valves allow the discharge of air that accumulates at high points along the pipeline. The air is entrained in the water and when it accumulates at the high points, it creates a throttling effect, as would a partially closed valve.

2. Air & vacuum valves allow large quantities of air to be expelled during line filling and allow air to re-enter the pipeline during draining of the pipeline whether planned or due to a rupture. These valves are located at high points along the line.

3. "Combination air and vacuum release valves" combine both the air release and air & vacuum valves as described above. It is this type of valve that is generally specified in the District system. Variance from the use of combination air and vacuum release valves requires approval by the District Engineer.

B. Location: Combination air release valves shall be located at all high points along the pipeline or as otherwise required by the District Engineer.

C. Sizing: The following is provided as guidelines for determining the size of combination air and vacuum release valves:

1. Determine the maximum rate of flow that can occur in the line -

Rate in CFS under filling conditions $\frac{GPM}{7.48x60}$

Rate in CFS under draining conditions $0.087\sqrt{S\,D^5}$

S = Slope or gradient (ft. per foot)
D = Diameter of pipe in inches

2. Using the largest value in "1" above, the size should be a minimum of:

| Rate | Valve Size |
|---|---|
| 0 - 5 CFS | 1" |
| 5 - 15 CFS | 2" |

3. For most installations involving 8-inch (200 mm) pipelines, the valve will be 1-inch size (25 mm). Standard Plates No. 13 and 14 illustrate typical installations.

4. In addition to the above requirements, steel pipelines shall be evaluated for collapsing pressure. The engineer shall investigate collapsing pressure in accordance with the pipeline manufacturer's instructions and certify that such an investigation has been performed and that the design is in accordance with the manufacturer's requirements.

## 2.9 BLOW-OFF ASSEMBLIES

A. General: Blow-off assemblies shall be located at every low spot in the line to facilitate line draining and flushing, see Standard Plates No. 11 and 12. Fire hydrant assemblies can be substituted for blow-off assemblies, providing a bottom outlet tee is used to connect to the main line (see Section 3.11, Fire Hydrant Assemblies). Design engineers are encouraged to substitute fire hydrant assemblies for blow-off assemblies whenever possible.

Blow-off valves shall be constructed on all dead end lines (i.e., cul-de-sacs) where a fire hydrant is not required.

B. Sizing: Blow-offs should be sized according to the following criteria:

1. In general, a particular section of pipeline should be capable of being drained within 2-4 hours.

2. The blow-off should be capable of creating a velocity of not less than 2.5 fps (0.75 mps) in the pipeline for the removal of sediments. Table 2-9 lists recommended blow-off sizes for average pressures ranging between 45 and 100 psi, which will achieve this velocity.

TABLE 2-9

| Pipe Size | Blow-off Size |
|---|---|
| Up to 8" (150 mm) | 2" (50 mm) |
| Up to 12" (250 mm) | 4" (100 mm) |
| Above 12" | By special design |

## 2.10 DESIGN FOR PROPER FLUSHING

Proper flushing of water mains and the prevention of sediment buildup are important aspects of the District's maintenance program. Therefore, the following criteria apply:

A. Unnecessary intermediate low points in the lines shall be eliminated wherever possible to prevent sediment accumulation.

B. The flushing techniques as described in Sections 9.3 (Role of Flushing) and 9.5 (Disinfecting Water Mains) shall be followed.

C. Piping systems shall be looped. Dead end pipelines may be permitted only with the approval of the District Engineer.

## 2.11 HORIZONTAL AND VERTICAL CURVES

A. General: The horizontal alignment of water pipelines in curved streets shall follow the street curvature or radius. Pipeline alignments shall not cross, nor meander about the street centerline. Allowable joint deflections shall be as set forth in Table 2-10 or the manufacturer's recommendations, whichever criteria is more stringent. Vertical grade breaks in excess of the allowable joint deflections are disallowed. Fittings shall be required or a vertical curve shall be constructed in lieu of a grade break exceeding the allowable joint deflections.

TABLE 2-10

| Normal Pipe Size Inches | Minimum Radius of Curvature |
|---|---|
| 6" | 175' (53 m) |
| 8" | 225' (69 m) |
| 10" | 275' (84 m) |
| 12" | 325' (99 m) |

B. PVC (AWWA C 900) Pipe: The standard laying length for PVC pipe is 20 feet. The pipe must not be bent to a lesser (tighter) radius than the minimum shown Table 2-10. Little or no deflection can be achieved at the joints.

C. Steel Pipe: The maximum allowable deflection per joint for bell and spigot steel pipe shall be limited to 2-1/2 degrees. The minimum radius of curvature for bell and spigot steel pipe up to 18-inch in diameter shall be 920 feet of 40-foot pipe lengths and 460 feet for 20-foot pipe lengths. Shorter pipe lengths and/or fittings are required for radiuses less than 460-feet.

D. Ductile Iron Pipe: The maximum allowable deflection for pipe sizes 6" through 12" is 4 degrees and for pipe sizes 14" through 18" is 3 degrees. When using standard 18 foot laying lengths, the minimum radius of curvature should be 260 feet (79 m) and 345 feet (105 m) for 6"-12" pipe and 14"-18" pipe, respectively. If changes in grade or alignment cannot be accomplished with the use of couplings, then standard fittings are available with bends of 90°, 45°, 22-1/2°, or 11-1/4°.

## 2.12 PROPER SIZING OF WATER METERS AND SERVICE LINES

A. General: Table 2-11 lists the types of meters employed by the District by specific use. Two references for discussion of water meter sizing are published by the American Water Works Association (AWWA) as follows:

1. AWWA Manual M6 - "Water Meters - Selection, Installation, Testing and Maintenance".

2. AWWA Manual M22 - "Sizing Water Service Lines and Meters".publications.

B. Meter Types:

1. The District uses positive-displacement piston or disc-type meters for residential and other customers with usage habits that include low flows as well as periods when no water is used.

2. Although rarely employed, the District may on occasion use current (turbine) meters for large water use customers with water usage habits that do not include low flow or no flow periods. The use of a current or turbine meters requires the approval of the District Engineer.

3. The District uses compound meters for commercial, industrial, and other large water use customers. Compound meters are a hybrid type meter that includes both a positive-displacement meter (to measure low flows) and a turbine or current type meter (to measure periodic large flows). Compound meters experience lower head losses than the displacement type equipment. However, due to the relatively maintenance requirements for compound meters, each application shall be carefully selected and approved by the District Engineer prior to the issuance of a certificate of occupancy.

TABLE 2-11
SUGGESTED USES FOR EACH TYPE OF METER CLASSIFICATION (AWWA)

| Meter Type | Suggested Use |
|---|---|
| Positive-displacement (5/8 - 2 in) | - Customers with normal demands<br>- Residential, small to medium apts<br>- Small businesses (barber shops, small hotels & motels, Restaurants) |
| Current(Turbine) (2 - 12 in) | - Special uses requiring high demands, large landscape or continuous flows |
| Compound (2 - 12 in) | - Most commercial & industrial<br>- Medium hotels & motels.<br>- Special customers having high and low demands<br>- Schools<br>- Large apartments |

C. Meter Sizing: District staff shall select the type and size of the meter for each proposed use. Meter selection will be based on the flow requirement and the type of use. Meter selection shall not be based solely on pressure loss through the meter.

Meter facilities shall be sized for ultimate demand(s). If there is a potential that future demand will be greater than proposed demands at the time of construction or increased water usage can be anticipated in the future, than, with the exception of the meter size, all facilities shall be sized for the anticipated ultimate future usage. The meter may be sized for the current demand but with a meter box and connections that are sized for the anticipated greater future requirements.

District staff will select the meter type. Table 2-12 provides guidelines for meter selection and sizing.

TABLE 2-12

| Service Line | Application | Meter Size | Meter Description | Low Flow (GPM*) | Normal Flow Range (GPM) | Max. Rating GPM |
|---|---|---|---|---|---|---|
| 1" | Residential | 3/4" | Positive Displacement | 0.5 | 2-15 | 30 |
| 1 1/2" | Residential Dual Service | 3/4" | Positive Displacement | 0.5 | 2-15 | 30 |
| 1" | Residential | 1" | Positive Displacement | 0.75 | 3-25 | 50 |
| 2" | Residential | 1-1/2" | Positive Displacement | 1.5 | 5-50 | 100 |
| 2" | Residential | 2" | Positive Displacement | 2 | 8-80 | 160 |
| 2" | Irrigation | 1-1/2" | Positive Displacement | 1.5 | 5-50 | 100 |
| 2" | Irrigation | 2" | Positive Displacement | 2 | 8-80 | 160 |
| 2" | Irrigation | 2" | Turbo (or current) | 3 | 4-160 | 200 |
| 4" | Irrigation | 3" | Turbo (or current) | 4 | 5-350 | 450 |
| 4" | Irrigation | 4" | Turbo (or current) | 10 | 15-1000 | 1,250 |

| Service Line | Application | Meter Size | Meter Description | Low Flow (GPM*) | Normal Flow Range (GPM) | Max. Rating GPM |
|---|---|---|---|---|---|---|
| 2" | Commercial & Institutional (No Fire) | 2" | Compound | 1/4 | 2-80 | 160 |
| 4" | Commercial & Institutional (No Fire) | 3" | Compound | 1/2 | 4-160 | 320 |
| 4" | Commercial & Institutional (No Fire) | 4" | Compound | 3/4 | 6-250 | 500 |
| 6" | Commercial & Institutional (No Fire) | 6" | Compound | 1.5 | 10-500 | 1,000 |
| 6" | Commercial & Institutional (Private Line) | 6 x 3" | Detector Meter | 1/2 | 16-1,600 | 1,600 |
| 6” | Commercial & Institutional (Private Line) | 6" | Detector Check with 3-2" compounds in tandem | 1/2 | 12-480 | 2,560 |

Notes:
1. B/F = backflow device
2. In high-pressure areas for residential use, a 3/4" service line may be used. See Section 2.3 (Selection of Pipe Types and Classes)
3. AWWA recommends that continuous flow service in the meter not exceed 30% of the meter’s maximum capacity.
4. AWWA recommends that for design purposes that the maximum meter capacity be 80% of the rated capacity, as established by the meter manufacturer.

* At 95% accuracy

The average range of pressure losses through a meter, by meter type, is listed in Table 2-13

TABLE 2-13

| | Pressure Loss (psi) at Designated Flow | |
|---|---|---|
| Meter Type | @ 30% of Max. Capacity | @ 80% of Max. Capacity |
| Displacement | 0.5 -1.1 | 6.3 - 8.6 |
| Compound | 2.5- 4.2 | 5.8 - 8.9 |
| Current (Turbine) | 0.7 - 1.2 | 2.0 - 3.0 |

Meter sizing is dependent on an accurate estimate of the anticipated maximum flow rate in accordance with Chapter 4 of AWWA Manual No. M22 can be consulted.

D. Service Line Sizing: Service lines shall be sized based upon the maximum anticipated flow rates and the allowable pressure loss. If service line pressure is marginal or if flows are anticipated to increase in the future, service lines shall be oversized one full size. Table 2-14 provides guidelines for the selection of service lines by meter size:

TABLE 2-14

| Meter Size | Service Line Size |
|---|---|
| 5/8" - 1" | 1" copper |
| Dual ¾" | 1 1/2" copper |

Table 2-15 can be used to estimate the pressure loss through the service line:

TABLE 2-15
PRESSURE LOSS IN PSI PER 100 FOOT OF PIPE

| Service Line Size Inches | Flow Rate (GPM) | | | |
|---|---|---|---|---|
| | 5 | 10 | 20 | 50 |
| 1" copper | 1.12 | 4.04 | 14.51 | NA |
| 1-1/2" copper | 0.20 | 0.58 | 2.09 | NA |
| 2" copper | 0.04 | 0.15 | 0.54 | 2.93 |

## 2.13 LOCATION OF METER BOXES, FIRE HYDRANTS, AND AIR RELEASE ASSEMBLIES

A. Meter Boxes: These shall be located as shown on Standard Plate No. 8. Meter boxes shall not be located in high traffic areas, including driveways and driveway aprons unless authorized by the District Engineer.

B. Fire Hydrants: These shall be located at least 2 feet (0.6 m) behind the curb per Standard Plate No. 8 (see Section 2.4.B, Fire Hydrants).

C. Combination Air and Vacuum Release Assemblies: Locate these per Standard Plate No. 8 with particular attention to minimize the visual impact by locating them near property lines rather than in the middle of the front yard area and behind the sidewalk within the public right of way.

D. Policy Regarding Backflow Prevention Devices (BFPD): Backflow prevention devices, including by not necessarily limited to double detector check valve (DDC) assemblies and Reduced Pressure Backflow Preventer (RP) assemblies shall be installed within 25 feet behind the curb face.

All BFPD's shall be screened from view to the maximum practical extent possible as directed by the District Engineer and/or the City Planning Department.

E. Policy on Irrigation Meters: Where the parkways or side landscaping strips along streets are to be irrigated, a separate meter shall be installed on each side of the street. Running an irrigation line from the meter to the opposite side of the street is prohibited.

Where a median strip must be irrigated, the meter shall either be in the side parkway. Meters are not allowed in the center median strip. The meter location shall easily accessible and protected from being covered by landscape materials or other obstructions. The District Engineer reserves the right to determine and/or select all meter locations.

F. Policy Regarding Master Meters for Single Owner, Multi-Tenant Commercial/Industrial and Multi-Family Residential Complexes: All single owner, multi-tenant commercial/industrial complexes, and multi-family residential developments shall be provided water service through a master meter. Master meters shall be installed in lieu of individual tenant meters and shall be provided at all points of connection of the on-site piping to the District's system. Variations from this policy shall require permission from the District Board of Directors.

## 2.14 STRUCTURAL REQUIREMENTS

A. Under Roads: All structures and pipe placed under public roads shall be of sufficient strength to support, with an adequate factor of safety the backfill, road surfacing, and H-20 loading per AASHTO Standard Specifications (truck loading with impact). Higher loading may be as specified by the Public Works Department or as required by the District Engineer.

B. Other Pipes and Structures: Water lines designed to cross under or over other pipes or structures shall be protected from damage and shall be constructed to prevent endangering the other pipe or structure. Particular attention shall be given to the possibility and prevention of damage caused by settlement. In the event that there is a potential that future replacement of any pipeline may be difficult due to the pipe or structure, special design consideration may be required and shall be submitted to the District Engineer for review and approval prior to construction. The use of any encasement or other protection requires approval of the District Engineer prior to the finalization of design.

C. Flexible Joints: Flexible joints that allow for differential settlements or other movement of water pipe lines or structures, adjacent pipe and adjacent structures shall be provided where water lines enter encasements or structures. Flexible joints shall be within a minimum of 24 inches (600 mm) of such structure unless otherwise approved by the District Engineer.

1. Expansion Joints: Expansion joints shall be installed at locations where protection against damage from linear expansion is required. Adjacent piping shall be strong enough to transfer loads. The design engineer shall indicate location of expansion joints on the project drawings.

2. Flexible Ball Joints: Flexible ball joints shall be installed at locations where protection against bending is required but where protection against linear expansion is not required. The design engineer shall indicate location of flexible ball joints on the project drawings.

3. Flexible Expansion Joints: Flexible expansion joints are available in either single ball or double ball models. Double ball models are acceptable at all locations where protection from bending moments, axial stresses, and shear stresses are required and are the preferred type of joint. Double ball models shall be used at all locations where differential shear protection is required such as water storage tanks, bridge abutments to bridge decks, the crossing of known faults, and in some cases the transitions between disturbed and undisturbed soils. Single ball models may be used in installations such as pump stations, valve installations inside buildings or "inline" pipeline protection. Single ball flexible expansion joints may only be used with special written permission of the District Engineer. The design engineer shall indicate location of flexible expansion joints on the project drawings.

D. Thrust Blocks. Thrust blocks are required in the following locations:

1. Abrupt changes in grade or alignment requiring tees or elbows;

2. Changes in pipe size;

3. Pipeline dead ends;

4. Locations subject to sudden thrust, such as valves, Hydrants, etc.;

Refer to Standard Plates No. 15, 16, and 17 for thrust blocks dimensions and details.

E. Steep Grades: Water lines laid on grades steeper than 10 percent, which are not under, nor intended to be under pavement should be examined for possible erosion protection. Where the slope exceeds 33 percent pipe anchors and backfill stabilizers shall be installed in accordance with the American Public Works Association Standard Plan 221-0.

Where steep grades are present, restrained joint pipe may be used. Thrust force shall be checked using AWWA M11. Pipe without welded joints may require substantial anchorage to prevent separation.

F. Design For Earth Loads: Generally, because of the pipe materials specified and the relatively shallow depths of cover, specific design for earth loads is not necessary. Therefore, the subject will not be covered in any detail in these standards. However, the engineer is responsible for design for earth load. The following sources of information for earth load design are available:

1. AWWA Manual No. M-11 covering steel pipe in all size ranges.

2. AWWA standard C900 covering PVC pipe in sizes 4" through 12".

## 2.15 SPECIAL CONSIDERATIONS FOR WELDED STEEL PIPE

Where joints are welded, it is possible to eliminate or reduce thrust blocks providing that the steel is not over stressed or the shear resistance by the soil to pipe movement is less than the thrust it is trying to resist. The subject matter is outside of the scope of these standards and requires engineering analysis by the designer for submission, review and approval by the District Engineer.

In order to prevent the mortar lining and coating from cracking, the deflection of the steel pipe must not exceed 2% of the diameter as a result of both live and dead loads.

## 2.16 FIRE SERVICE LINES

Fire service lines are those lines from the main to a building intended solely for fire protection purposes including building fire sprinkler systems. The District has jurisdiction for the design and inspection up to the detector check backflow prevention assembly, which must be placed on the fire service line. The materials for these lines should be PVC Class 200 pipe underground and ductile iron pipe above ground. The most commonly used sizes are either 6" (150 mm) or 8" (200 mm).

Section 12 (Cross Connections & Backflow Prevention) covers the requirements for the backflow prevention devices (detector check).

## 2.17 OTHER DESIGN CONSIDERATIONS

Reservoirs and pumping stations are covered in Section 13 (Reservoirs and Pumping Stations). The District is required by the California Department of Health Services to sample and analyze the potable water within its distribution system for bacteriological quality. Each potable water sample is collected from a sampling station (Plate No. 26). If the number of active service connections increase within the District's distribution system, such that another sampling station is required, the developer shall install, at no cost to the District, the sampling station at an approved location within the development as determined by the District.

# SECTION 3.0
# MATERIALS

## 3.1 GENERAL REQUIREMENTS

This section discusses the materials involved in water pipeline systems and associated construction activities. The materials selected have been chosen for their strength, durability, and ease of maintenance. All materials, unless specifically approved otherwise by the District Engineer, shall be new and unused.

Where applicable, American Water Works Association (AWWA) or other standards have been referenced and it shall be the responsibility of the developer/engineer/contractor to be familiar with those standards to insure compliance. Titles corresponding to the specific numbers are given in the reference section of these standards.

In some instances, and in order to establish some degree of parts standardization, particular manufacturers and product names are listed, for guidance, as being approved. Other products may also meet the requirements, but first must be certified in writing by the product/material manufacturer as being equal and shall be approved in writing by the District Engineer for use.

The District reserves the right to discontinue or disallow the use of any specific product or material. The District Engineer has the authority to make such changes based upon his/her engineering judgment, product performance, or maintenance criteria at no cost to the District.

## 3.2 TESTING AND FINAL ACCEPTABILITY OF MATERIAL

The District shall require such tests and certifications as deemed necessary to show that the specified materials have been employed. Notwithstanding prior factory or yard inspections, the Director or District Engineer shall have the right to reject any damaged or defective materials found on the job, which will affect the durability or performance of the installation and order its removal from the site.

## 3.3 MAIN LINE PIPE MATERIALS

Main pipeline materials for nominal pipe diameters 6-inch through 18-inch shall be either polyvinyl chloride (PVC) or ductile iron pipe (DIP) as described in this section or as otherwise directed by the District Engineer. Main pipeline materials for nominal pipe diameters larger than 18-inches shall be either steel or ductile iron pipe (DIP) as described in this section or as otherwise direct by the District Engineer.

A. PVC Pipe:

1. PVC pipe shall conform to the requirements of AWWA C900 that covers PVC (polyvinyl chloride) pipe in sizes 4-12 inches or AWWA C905 that covers PVC pipe in sizes 14 inches and larger. Each length of pipe shall be clearly marked with the following:

- Nominal size and O.D. base (i.e., 8" cast iron pipe size);
- Material code (i.e."PVC 1120");
- Dimensional ratio (i.e., DR 25 where DR is equal to outside diameter "divided by" thickness);
- AWWA pressure class (i.e., PC 150);
- AWWA designation "AWWA C900" or "AWWA C905";
- Manufacturer's trade name and production record code;
- Seal (mark) of testing agency.

The standard laying length shall be 20 feet (plus/minus) 1 inch in all classes and sizes. A maximum of 15 percent may be furnished in random lengths of not less than 10 feet each.

One gasket shall be furnished with each length of elastomeric-gasket bell-end pipe and two gaskets shall be furnished with each coupling where couplings are used.

Pipe surfaces shall be free from nicks, scratches, and other blemishes. The joining surfaces of pipe spigots and of integral bell and sleeve reinforced bell sockets shall be free from gouges or other imperfections that might cause leakage.

2. Joint Mechanisms: The joints shall be either of the following:

- Integral wall - Thickened bell end (bell and spigot with rubber gasket).
- Integral sleeve reinforced bell end.
- Elastomeric gasket couplings.

PVC solvent cement joints shall <u>not</u> be used at any time on distribution pipelines or fittings.

3. Couplings and Fittings: Where couplings are used, they shall meet the requirements of AWWA C900 for PVC pipe less than 14 inches in diameter or AWWA C905 for PVC pipe 14 inches in diameter or larger. Couplings shall be as furnished by the manufacturer. Couplings shall be marked with the same information as the pipe.

Ductile iron fittings shall be used with PVC pipe and these are discussed in Section 3.4 (Main Line fittings). PVC solvent cement joints shall <u>not</u> be used at any time on distribution pipelines or fittings.

4. Physical Test Requirements: Inspection and testing by the manufacturer shall be in accordance with AWWA C900 for PVC pipe less than 14 inches in diameter or AWWA C905 for PVC pipe 14 inches in diameter or larger. All testing shall be done by a certified testing laboratory with such testing available for inspection by the District Engineer. If requested by the District Engineer, the manufacturer shall supply a letter of certification attesting to their pipe meeting these specifications.

B. <u>Steel Pipe</u>:

1. Pipe: Steel pipe shall conform to the requirements of AWWA C200 and as specified below, that pertain to electrically butt-welded, straight-seam or spiral-seam pipe and to

seamless pipe 6 inches (150 mm) in diameter or larger. Steel pipe material shall conform to one of the criteria listed in Table 3-1 below.

TABLE 3-1

| Specification | Grade | Minimum Yield Stress (psi) |
|---|---|---|
| ASTM A283 | C | 30,000 |
| ASTM A283 | D | 33,000 |
| ASTM A570 | 30 | 30,000 |
| ASTM A570 | 36 | 36,000 |
| ASTM A570 | 40 | 40,000 |
| ASTM A570 | 45 | 45,000 |

The stress in the steel pipe shall not exceed the higher of 15,000 psi or one-half the designated working pressure and the minimum thicknesses as listed in Table 3-2 shall be used.

TABLE 3-2

| Inside Diameter (Inches (mm)) | Minimum Thickness (Inches) | Maximum Pressure* (PSI) |
|---|---|---|
| 8" (200 mm)** | 0.105 (12 gage) | 394 psi |
| 10" (250 mm) ** | 0.135 (10 gage) | 405 psi |
| 12" (300 mm) ** | 0.135 (10 gage) | 338 psi |
| 14" (350 mm) ** | 0.150 (9 gage) | 321 psi |
| 16" (400 mm) ** | 0.165(8 gage) | 309 psi |
| 18" (450 mm) | 0.179 (8 gage) | 298 psi |
| 20" (500 mm) | 0.209 (5 gage) | 313 psi |
| 22" (550 mm) | 0.224 (4 gage) | 305 psi |
| 24" (600 mm) | 0.250 (¼ inch ) | 313 psi |

* Assuming 15,000 psi stress and the formula below:

$$P = \frac{2ST}{D} \text{ where}$$

P = Pressure (psi [KPa])
S = Allowable stress 0.50 times the minimum yield strength of the steel.
T = Pipe wall thickness (inches)
D = Outside diameter (inches)

The gauges specified above consider the thicknesses required for welding as well as that required for external loads and a corrosion allowance.

Another factor for consideration in some steel lines is earth loads. AWWA Manual M-11 and Section 2.14 (STRUCTURAL REQUIREMENTS) of these standards should be consulted in this regard.

The pipe shall be essentially round. The outside circumference shall not vary more than (plus/minus) 1.0 percent from the nominal outside circumference based upon the diameter specified (except for the ends, which are discussed below).

The pipe shall not deviate by more than 1/8 inch from a 10-ft. long straight edge held against the pipe.

The pipe lengths, generally 40 feet long, shall be furnished with a tolerance of (plus/minus) 2 inches. Random lengths shall be furnished in lengths averaging 29 feet or more, with a minimum length of 20 feet.

2. Mortar Lining and Coating (ML & C): Unless otherwise approved or as revised below, all steel pipe shall be mortar lined and coated in accordance with AWWA C205 that covers shop applied lining and coating. Cement shall be Type II, ASTM C150.

a. Mortar Lining: Cement mortar lining shall be uniform in thickness except at joints or other discontinuities. Ends of lining shall be left square and uniform and the lining holdback shall be as specified for the particular type of joint.

TABLE 3-3
CEMENT MORTAR LINING THICKNESS

| Nominal Pipe Size (Inches) | Lining Thickness (Inches) | Tolerance (Inches) |
|---|---|---|
| 6" - 10" | 5/16 | -1/16 + 1/8 |
| 12" - 16" | 3/8 | -1/16 + 1/8 |
| 18" – 24” | 1/2 | -1/16 + 1/8 |

It should be noted that the District requirements for thickness exceed those of the AWWA standard. Also, it should be noted that no wire fabric reinforcement is required for any lining of specials 24-inches in diameter or less.

b. Mortar Coating: Cement mortar coating shall be a reinforced coating over all outside surfaces of the pipe and specials. The coating shall be of a uniform thickness except at joints or other discontinuities in the pipe. Ends of coatings shall be left square and uniform and the coating holdback shall be as specified for the particular type of joint.

TABLE 3-4
CEMENT MORTAR COATING THICKNESS

| Nominal Pipe Size (Inches) | Coating Thickness (Inches) | Tolerance (Inches) |
|---|---|---|
| 6" - 10" | 1/2 | -0 + 1/8 |
| 12" - 16" | 3/4 | -0 + 1/8 |
| 18" – 24” | 1 | -0 + 1/8 |

It should be noted that the District requirements exceed those of the AWWA standard.

Reinforcement for the coating of pipe section shall be one of the following as specified by the supplier:

- Spiral wire - 15 gage @ max. 1-1/4 in. spacing with wire meeting ASTM A82.
- Wire fabric - 2 x 4 steel wire mesh, 13 gage each way meeting ASTM A185.
- Ribbon mesh - 1 x 1 mesh of 18 gage wire or 1-1/2 x 1-1/2 mesh of 17 gage wire, all meeting ASTM A82.

c. Field Joints: The materials and construction methods for field joints shall be as discussed in Section 7 (CONSTRUCTION).

3. Electrically Bonded Connections: Two metal jumper rods are required to form an electrically bonded connection between all steel pipe joints that are not welded, except at insulating couplings called for on the plans.

The jumper rods shall be either 3/8" diameter rods or 1/4" x 1/2" bars. They shall be at least 7 inches long with an offset of 1/4 inch in the middle 3 inches. No welding shall take place in the middle 3-inch section.

4. Factory Tests and Inspection: All materials shall be inspected and tested in a normal air-dry condition by the manufacturer prior to shipment for conformance to the stated requirements. The District Engineer shall at all times have the right to inspect the work and materials in the course of manufacture and to make or witness such tests as required in these specifications, or as deemed advisable. In lieu of the preceding, the manufacturer shall upon request submit a certificate certifying that the materials meet the requirements of this specification. All testing will be done in recognized testing laboratories within the State of California approved by the Director.

5. Welded Joints: One of each section shall be swaged out to form a female or bell end which shall permit the male or spigot end to enter approximately one-inch with a clearance of approximately 1/32-inch. The spigot end shall be "sized" to permit it to enter the bell end of the adjacent section and the weld bead shall be ground flush for the distance it is to enter the bell end.

6. Butt Strap Closures: The butt straps shall be the same thickness as the pipe wall but not less than 10 gauge, at least 10 inches wide and rolled to fit the outside cylinder diameter, and

shall be centered over the ends of the pipe sections they are to join. A standard 5-inch pipe half coupling shall be shop welded to the top section of the butt strap to permit access for mortar lining the inside of the joint. The coupling shall be sealed with a standard 5-inch plug field welded to the coupling.

C. Ductile Iron Pipe (DIP)

1. Pipe: The pipe shall conform to AWWA C151 for both quality and strength. Each pipe shall include the letters "DI" or word "DUCTILE" to indicate the pipe material.

2. Joints: These shall be of the rubber gasket push-on joint type conforming to the requirements of AWWA C111 and being of the "tyton" type.

3. Fittings: All fittings shall conform to AWWA C110.

4. Lining and Coating: Unless otherwise approved, the internal surfaces shall be lined with a uniform thickness of cement mortar and then sealed with a bituminous coating in accordance with AWWA C104. With the approval of the District Engineer, ductile iron fittings can be coated with fusion-bonded epoxy in accordance with AWWA C116.

The outside surface shall be protected with a polyethylene encasement furnished and installed in accordance with AWWA C105.

## 3.4 MAIN LINE FITTINGS

Typical materials for main line fittings are included below. Contact the District Engineer for current materials standard.

A. Gray-Iron and Ductile Iron Fittings: These fittings shall meet the requirements of AWWA C110. All fittings shall be rated for 250 psi. This standard covers but is not limited to fittings with combinations of ends including mechanical joints, plain end, flange, push joint. The fitting types are as follows:

90° bend, 45° bend, 22-1/2° bend, 11-1/4° bend.

Tees, reducers, caps & plugs, connecting pieces, flanged bends, flanged tees, flanged reducers.

It should be understood that care must be exercised to not mix mechanical and flange joint ends since they will not mate. Section B discusses flange requirements.

B. Flanges, Bolts & Gaskets: They shall be flat-faced and meet the requirements of AWWA C207 and should be AWWA standard steel hub flanges, Class E (275 psi) (these flanges meet ANSI B-16.5). The flanges shall be marked with the size, name or trademark of manufacturer and with the AWWA class, i.e., "E". Bolts and nuts shall be stainless steel type 316. Gaskets shall be of the drop-in gasket type, 1/8" thick. All bolts shall be coated with a nickel base anti-seize designed for use with stainless steel bolts, prior to installation.

TABLE 3-5

| Pipe Size (Inches) | Bolt Hole Dia.. (Inches) | Bolt Dia. x Length (Inches) | No. Bolts |
|---|---|---|---|
| 6 | 7/8 | ¾ x 3½ | 8 |
| 8 | 7/8 | ¾ x 3½ | 8 |
| 10 | 1 | 7/8 x 4 | 12 |
| 12 | 1 | 7/8 x 4 | 12 |
| 14 | 1-1/8 | 1 x 4½ | 12 |
| 16 | 1-1/8 | 1 x 4 1/2 | 16 |
| 18 | 1-1/4 | 1 1/8 x 5 | 16 |

The inherent problem with flanges is that they are rigid and do not provide flexibility. Two keys to their installation are (1) uniform tightening of the bolts, and (2) prevention of bending or torsional strains. Proper anchorage is important to meet the latter objective.

C. Mechanical Joint Fittings: This is a bolted joint of the stuffing box type. Each joint has a bell provided with an exterior flange having bolt holes or slots, and a socket with gaskets to receive the plain end of the pipe or fitting. The joint also has a sealing gasket, follower gland with bolt holes and tee head bolts with hexagonal nuts.

The mechanical joints shall meet AWWA C111. That standard covers the joint as well as gaskets and bolts.

TABLE 3-6

| Pipe Size (Inches) | No. of Bolts | Bolt Dia. x Length (Inches) |
|---|---|---|
| 6 | 6 | ¾ x 3½ |
| 8 | 6 | ¾ x 4 |
| 10 | 8 | ¾ x 4 |
| 12 | 8 | ¾ x 4 |
| 14 | 10 | ¾ x 4½ |
| 16 | 12 | ¾ x 4½ |
| 18 | 12 | ¾ x 4½ |

D. Flexible Couplings: These are designed to connect plain end pipes with a mechanical compression joint to provide a stress relieving, flexible, leak proof joint. They can be ordered in steel or cast iron pipe sizes (note: C900 PVC pipe has same O.D. as cast iron). The couplings shall either be Dresser Style 38, Romac 501 or Smith-Blair Series 411. The center barrel length for pipe diameters greater than 8-inches shall be a minimum of 14-inches. All flexible couplings shall be fusion-bonded epoxy lined and coated in accordance with AWWA C213. Fasteners, nuts, and bolts shall be Type 316 stainless steel.

E. Transition Couplings: These are used to connect pipes of the same nominal size but different materials. AC, steel and PVC pipes can be connected to one another. Approved are Dresser Style 162, Romac 501 or Smith-Blair Series 413 transition couplings. The center barrel length for pipe diameters 8-inches or less shall be a minimum of 10-inches. The center barrel length for pipe diameters greater than 8-inches shall be a minimum of 14-inches. All transition couplings shall be fusion-bonded epoxy lined and coated in accordance with AWWA C213. Fasteners, nuts, and bolts shall be Type 316 stainless steel.

F. Flanged Coupling Adapters: These are used to connect plain end pipe to flanged valves, pumps, meters, etc. They eliminate the need for both a flanged spool and coupling. Generally, they are available in sizes through 12 inches. Approved are Dresser style 127 cast iron, Romac style FCA501 (for cast iron and steel pipe sizes up to 16-inch) and Smith-Blair series 912 cast iron or 913 steel flanged coupling adapters. All flanged coupling adapters shall be fusion-bonded epoxy lined and coated in accordance with AWWA C213. Fasteners, nuts, and bolts shall be Type 316 stainless steel.

G. Insulating Couplings: These are used to stop the flow of electric current across the joint by means of an insulating boot. Approved are Smith-Blair Series 438, Romac IC501 and Dresser Style 39 insulating couplings. All insulated couplings shall be fusion-bonded epoxy lined and coated in accordance with AWWA C213. Fasteners, nuts, and bolts shall be Type 316 stainless steel.

H. Expansion Joints: Expansion joints shall be manufactured of ductile iron conforming to AWWA C153. All expansion joint shall have a capability to expand and contract a minimum of 4 inches or as otherwise indicated on the approved plans. All expansion joints shall have restrained joints at each point of connection to the distribution piping, and be self-restrained at full expansion. Approved are EBBA Iron "Ex-Tend" 200 style or U.S. Pipe "TR-Flex" style expansion joints. All expansion joints shall be lined with 15-mil fusion bonded epoxy in accordance with AWWA C213.

I. Flexible Ball Joints: Flexible ball joints shall be manufactured of ductile iron conforming to AWWA C153. All flexible ball joints shall consist of a ball and socket type of joint capable of at least 15 degrees minimum deflection. All flexible ball joints shall have restrained joints at each point of connection to the distribution piping. Approved are EBBA Iron FLEX 900 flexible ball joints. All flexible ball joints shall be lined with a minimum of 15 mils of fusion-bonded epoxy in accordance with AWWA C213.

J. Flexible Expansion Joints: Flexible expansion joints shall be manufactured of ductile iron in accordance with AWWA C153. Each flexible expansion joint shall consist of an expansion joint designed and cast as an integral part of a ball and socket type flexible joint. Each integrated ball shall have a minimum of 15 degrees of deflection per ball and each integral expansion joint shall have a minimum of 4 inches of expansion (or as otherwise indicated on the approved plans). Flexible expansion joints shall be the double ball configuration. Single ball models may only be used with the prior written permission of the District Engineer. All flexible expansion joints shall have restrained joints at each point of connection to the distribution piping, and be self-restrained at full expansion. Approved for cast iron pipe sizes are EBBA Iron "Flex-Tend" style double ball

flexible expansion joints. All flexible expansion joints shall be lined with 15 mil fusion bonded epoxy in accordance with AWWA C213.

K. Special Steel Pipe Fittings: AWWA C208 covers special fittings such as elbows, tees, crosses, reducers, etc., and should be consulted for a specific application.

## 3.5 SERVICE LINE MATERIALS AND FITTINGS

The materials covered in this section include the service copper line pipe, corp stop and saddles as well as the valves inside the meter box. Unless stated otherwise in this section, Service Line materials and fittings shall comply with the provisions of AWWA Standard C800. Where specific manufacturers' products are listed, it should be understood that other products that are equivalent may be used if approved in writing. Also, see Plate Nos. 18 through 21 for typical installations and Sections 2.12 (PROPER SIZING OF WATER METERS AND SERVICE LINE) and 7.10 (SERVICE CONNECTIONS AND SERVICE LINES) of these standards for design and construction considerations. This section is written as if the minimum service line size is 1".

A. Copper Pipe: Copper pipe material is approved for all 1-inch through 2-inch service lines. The pipe shall be Type K soft copper tubing with solder fittings. Solder fittings shall be lead-free. Solder shall be of the type certified for use in potable water applications as specified in AWWA Standard C800 Paragraph 4.4.1.

B. Service Saddles: Service saddles shall be either the doublewide strap type made of bronze with bronze nuts, or the stainless double steel strap type. The thread shall be female iron pipe. Service saddles for 1" through 2" service lines connecting to C-900, PVC pipe shall be James Jones J-969, Mueller BR2S, or Ford 202B. Service saddles for 1" through 2" service lines connecting to AC or DI pipe shall be James Jones J-979, Mueller BR2B, or Ford 202BS.

C. Corporation Stops: These shall be bronze with a male iron pipe thread on the inlet side. One-inch stops and 2" corporation (corp) stops shall be of the ball valve type. The outlet for the pipes shown below shall be as follows:

TABLE 3-7

| Service Pipe | Corp Stop Outlet | Corp Stop |
|---|---|---|
| 1" copper | Compression | Ford - FB1100-4-Q<br>James Jones – J-1935SG<br>Mueller – B-25028 |
| 2" copper | Compression or Copper tubing | Ford- FB1100-7-Q<br>James Jones – J-1957SG<br>Mueller - B-25028-00 (Tee-Head) |

D. Angle Meter Ball Valve Stop: These shall be bronze and in the 1- inch size they shall be a standard angle meter ball valve. In a 2-inch size they shall be a flanged angle meter ball valve. Refer to the table below.

TABLE 3-8

| Service Line | Angle Meter Stop | Inlet | Outlet | Type |
|---|---|---|---|---|
| 1"copper | Standard | Compression | Meter coupling nut | Mueller - B-24258 (1"x1")<br>Ford - BA43-444WQ (1"x 1")<br>Ford - BA43-342WQ (1"x 3/4")<br>James Jones – J-1963WSG (1"x 3/4") |
| 1½"*** or 2" copper | Flanged Angle | Compression | Flanged, Slotted for 1½" meters | Ford BFA 43-777WQ (1½" to 2")<br>James Jones – J-1975WSG |

* For a 3/4" meter use a 1 x 3/4" angle meter stop and for a 1" meter use a 1" angle meter stop.

** For a 2" service and 1½" meter, a 2" meter stop slotted for 1½" is used.

*** Use of 1½" service lines by special permission only.

E. Customer Hand Valve: These are to be full-flow bronze ball valves with a customer handle. The outlets are always female iron pipe threads. Refer to the table below.

TABLE 3-9

| Meter Size | Inlet | Outlet Size (Customer Side) | Type |
|---|---|---|---|
| 3/4" | 3/4" meter coupling nut | 1" | Ford - B13-342WHB34S<br>James Jones – J-1908<br>Mueller - B-24351 w/ B-20298 Handle |
| 1" | 1" meter coupling nut | 1" | Ford - B13-444WHB34S<br>James Jones – J-1908 |
| 1½" | Flanged | 1½" | James Jones – J-1913W<br>Ford- BF13-676WHB67S<br>Mueller - B-24337 w/ B-20298 Handle |
| 2" | Flanged | 2" | James Jones - J-1913W<br>Ford - BF13-676WHB67S |

## 3.6 METER BOXES AND VALVES

All meter boxes shall have provisions for a touch/radio read receptacle. The meter boxes for 3/4", 1", 1 ½" and 2" meters shall be concrete with a concrete cover and rectangular concrete reading lid according to the following:

TABLE 3-10

| Meter Size | Box Inside Dimensions | Model Numbers |
|---|---|---|
| 3/4" or 1" | 12" x 20" | Brooks Products 37-S or Eisel Enterprises No. 437 |
| 1½" or 2" | 17" x 30" | Brooks Products 66-S or Eisel Enterprises No. 666 |

In the above, the Brooks designation "S" refers to the concrete cover and reading lid. The same requirement applies to Eisel Enterprises meter boxes.

Traffic lids are not generally approved since the meter boxes should be placed outside the traveled right-of-way, including driveways. Where no other alternative is available and the meter box will be in the traveled right-of-way, then a steel traffic lid shall be used. Again, it must be emphasized that the engineer is expected to place the meter boxes so that they are outside of driveways.

The angle meter stops and customer hand valves, which are placed inside the valve box, are discussed in the previous section of service lines.

The District crews will install the meter. A temporary jumper supplied by the District shall be installed pending installation of the meter.

## 3.7 WATER METERS

Water meter types and manufacturers shall be selected by the District and installation shall be by the District crews. Section 2.12 (Proper Sizing of Water Meters and Service Lines) discusses general meter types.

## 3.8 MAIN LINE VALVES

All main line valves shall include a valve extension if top of operating nut is 5 feet deep or greater. All valve extensions shall be pinned to the operating nut.

A. Butterfly Valves:

1. General: All butterfly valves shall be of the tight-closing, rubber-seat type conforming to AWWA C504 latest revision, except where noted herein. Valves shall be bubble-tight at the rated pressure in either direction and shall be suitable for throttling service and/or operation after long periods of inactivity. Manufacturer shall be ISO 9001 Certified or have similar certification up and above AWWA. Valve disc shall rotate 90E from fully open to tightly closed position.

2. Valve body: Shall be cast iron ASTM A126, Class B with integrally cast mechanical joints, ends for the pipe or flanged ends. All flanged ends shall be ANSI B16.1 flange drilling.

3. Disc: Discs for valve size 10" – 24" shall be of the concentric design. Valve discs shall be constructed of ductile iron ASTM A536, Grade 65-45-12 with a 316 stainless steel edge.

4. Shaft: Valves 10"- 24" shall have a one piece through shaft of 18-8 stainless steel, corresponding to the requirements of AWWA C504, latest revision. The shafts shall fasten to the disc by means of a threaded disc pin or through pin providing a positive leak proof connection of the shaft to the disc.

5. Valve Seats: Seats for valves 10" – 24" shall be simultaneously bonded and vulcanized to the body of the valve. All interior surfaces in contact with water, excluding stainless steel and disc, shall be rubber lined or epoxy coated. Valves with the rubber seat located on the valve disc will not be permitted. Seats shall be designed so that no adjustments or maintenance is required.

6. Bearings: All shaft bearings shall be of the self-lubricating, corrosion-resistant, sleeve type. Bearings shall be designed for horizontal and/or vertical shaft loading.

7. Packing: Shaft packing shall be self-adjusting and suitable for pressure or vacuum service. Packing for valves 30" and larger shall incorporate an adjustable packing gland and the packing shall be adjustable and/or replaceable without removing the valve actuator.

8. Valve Operators: Shall be of the manual traveling nut type and conform to AWWA C504. Operators shall be equipped with a 2" AWWA square-operating nut. They shall be sealed and gasketed and lubricated for underground service. The operator shall be capable of withstanding an input torque of 450 ft. lbs at extreme operator position without damage. All valve operators are to be installed and tested at the factory by the valve manufacturer. Bonnet and packing bolts shall be 316 stainless steel.

9. Painting and Coating: All valves shall be epoxy coated overall in accordance with Section 3.16 (MATERIALS-PAINTING). The valve disc shall be Fusion Bonded Epoxy Coated with and AWWA NSF-61 coating system or liquid epoxy on wetted interior surfaces 16 mils, holiday free. Exterior coating shall have 16 mils of liquid epoxy.

10. Testing: All valves shall be hydrostatic and leak tested in accordance with ANSI/AWWA C504, latest revision with the following modification: Buried service valves shall be tested and rated to 200 psi to facilitate field system hydro-test.

11. Proof of Design: Contractor shall provide to the District and shall obtain from the Manufacturer furnishing the valves an Affidavit of Compliance certifying that all required tests have been performed. This Affidavit of Compliance shall serve as proof of compliance with ANSI/AWWA C504, latest revision.

12. Marking: The manufacturer shall show on the valve the valve size, manufacturer, class and year of manufacture.

13. Approved Valves: Shall be either Pratt Groundhog, K-FLO 500 Series, or Mueller Lineseal.

14. Number of Turns: The number of turns to open or close is as follows:

TABLE 3-11

| Valve Size | Pratt Groundhog No. Turns | Mueller Lineseal No. Turns | K-FLO 500 Series No. Turns |
|---|---|---|---|
| 6" | 32 | 32 | 29 |
| 8" | 32 | 32 | 29 |
| 10" & 12" | 32 | 32 | 29 |
| 14" & 16" | 30 | 30 | 42 |
| 18" & 20" | 40 | 40 | 42 |

15. End types Available. Information of typical cases is as follows:

TABLE 3-12
ENDS AVAILABLE BY VALVE SIZE

| Type | Pratt Groundhog | Mueller Line Seal | K-FLO 500 Series |
|---|---|---|---|
| Flange x Flange | 6" - 24" | 6" - 24" | 6" - 24" |
| Flange x P.J. | 6" - 12" | 6" - 16", 24" | NA |
| P.J. x P.J. | 6" - 16" | 6" - 16", 24" | NA |
| M.J. x M.J. | 6" – 24" | 6" - 24" | 6" - 20" |

B. Resilient-Seated Gate Valves:

1. General: This specification pertains to resilient-seated gate valves for underground service 3 inches to 10 inches in size where design working pressures are less than 200 psig. Resilient-seated gate valves shall meet the requirements of AWWA standard specification C509 or latest revision thereof. Resilient-seated gate valves shall be of the same size as the main in which they are installed. All such valves shall be of the non-rising stem type, with 0-ring seal, equipped with 2 inch square operating nut that shall turn to the left in a counter-clockwise direction to open the valve. All bonnet, seal plate, packing plate nuts and bolts, shall be high strength type 316 stainless steel. Valve bodies and gates shall be manufactured of ductile iron with internal working parts machined from the grades of bronze specified as follows:

| Part | Grade of Bronze* |
|---|---|
| Stem | E |
| Stem Nut | A |

* Based on Table I, AWWA C509

Currently approved valves are manufactured by the Clow Corporation, the Mueller Company, and American Water Company.

See Section 3.16 (MATERIALS-PAINTING) for painting and coating requirements.

C. Plug Valves:

1. General: Plug valves are to be used where the water main pressures are expected to exceed 150 psi or where required by the District. They shall be pressure lubricated, concentric venturi pattern type with flanged ends.

2. Valve Operators: When located below ground, they shall be spur gear operated with watertight gear housings, lubricant pipe and road box. When located above ground or in vaults, they shall be worm gear operated. Outside locations shall include watertight gear housings.

3. Painting: See Section 3.16 (MATERIALS-PAINTING)

C. Gate Valves:

1. General: Whenever specified, resilient-seated gate valves shall be used instead of gate valves. Gate valves may only be used with special permission and approval of the District Engineer. When allowed, gate valves shall meet the requirements of AWWA C-500 and shall generally be the same size as the main or service in which they are installed. This specification shall pertain to valves 10 inches and smaller for which the design working pressure shall be 200 psi. All gate valves shall be counter-clockwise opening. Buried gate valves shall be equipped with 2-inch square cast iron operating nuts. Exposed gate valves shall have hand-wheels.

2. Gate Valves: 2 inches or smaller are not allowed. Ball valves as described in section 3.8 paragraph E below shall be used instead of gate valves.

3. Gate Valves: 3 inches through 10 inches. Gate valves shall have a non-rising stem, iron body, solid bronze internal working parts, parallel faced, with bottom wedging double discs and O-ring stuffing box. Bronze for all internal working parts, except stems, shall be ASTM B-62-70 (85-5-5-5).

Currently approved are:
Mueller A2380
Clow 5062, 65, 68, 70, 80

4. Painting: The painting requirements are identical to those for butterfly valves. See Section 3.16 (MATERIALS - PAINTING).

5. Marking: The manufacturer shall show the manufacturer's name or mark, the year of manufacturer, valve size and the designation of working pressure.

D. Main Line Ball Valves:

1. General: Ball valves used in the main pipelines and/or service runs shall be the same size as the pipeline. The valve shall be non-rising stem type, fluorocoated ball valves, in sizes through 2–inches, installed on potable water systems where full-open, full-closed, 360-degree tee head rotation, non-throttling control is required. The valve shall be manufactured of bronze alloys meeting the requirements of AWWA Specifications C800, latest revision.

2. The Valve body shall be generously proportioned heavy-duty type with screwed ends, in conformance with Federal Specifications for iron-pipe-sized threaded connections.

3. The valve body shall be rated at 300 psi WSP, 200 psi WOG rated and appropriately identified on the valve body.

4. The stem shall be manufactured of copper-silicon-bronze alloys meeting the requirements of ASTM Specifications B371, or ASTM Specifications B62, and contain less than 15% zinc.

5. All ball valves installed in distribution pipelines shall be equipped with a 2" gate valve operation nut for operation with standard gate valve wrenches. All other ball valves used in meter service or air-vac installations shall be equipped with tee-heads as described in the specific section.

6. The packing shall be Teflon (non-asbestos containing) material approved for potable water service.

7. Approved manufacturers and models are James Jones 1900 or Ford B11-777 with required features as described above.

F. Tapping Sleeves and Valves:

1. Tapping Sleeves: Tapping sleeves shall be of high tensile ductile iron or stainless steel construction specifically designed to withstand the strains and vibrations of the tapping machine and shall include a stainless steel tapping saddle.

The tapping sleeve must have gaskets at each end of the sleeve. Sleeves with only an O-ring around the tapped hole are not approved.

Approved tapping sleeves are as follows:

| Sleeve | Use |
|---|---|
| Romac SST III; | AC pipe, Class 150-200, Sizes 6-12 inches<br>PVC pipe, C-900, Sizes 6-12 inches<br>DI pipe, Class 50 and up, Sizes 6-12 inches |
| Ford FTSS | AC pipe, Class 150-200, Sizes 6-12 inches<br>PVC pipe, C-900, Sizes 6-12 inches<br>DI pipe, Class 50 and up, Sizes 6-12 inches<br>Steel Pipe, Sizes 6-12 inches |

Note: Larger sizes require special approval.

In selecting the class of the tapping sleeve, a Class 200 should be used wherever the main line is Class 200 or if the operating pressure exceeds 125 psi.

2. Tapping Valve: Tapping valves shall meet all of the requirements for resilient-seated gate valves as described in Section 3.8 A. The tapping valve shall have a clear unobstructed waterway. The seat rings shall be of a large diameter to allow entry of the full diameter tapping machine cutter.

3. See Section 3.16 (MATERIALS-PAINTING) for painting and coating requirements.

G. Valve Stacks and Covers: The valve stack shall be Schedule 40 PVC pipe 8 inches in diameter (see Plate No. 7).

The valve box cap shall be of the heavy duty, long body type. Approved is:

Cristy G-3 or approved equal with "WWD8" on top.

## 3.9 COMBINATION AIR RELEASE ASSEMBLIES (PLATE NOS. 13 & 14)

A. Mechanical Assembly: As discussed in Section 2.8 (AIR AND VACUUM ASSEMBLIES), the combination air release assembly has both the features of an air release valve and an air and vacuum valve. Both units shall be housed in a cast iron body and all internal parts such as the float, bushings, level pins, seat and baffle shall be either stainless steel or brass as furnished by the manufacturer. All assemblies shall be rated at 300 psi maximum operating pressure.

Approved assemblies are as follows:

| Size | APCO Valve No. | Clow Model Design | Val-Matic Model Design | Crispen Model Design |
|---|---|---|---|---|
| 1" | 143C | A | 201C | U10 |
| 2" | 145C | B | 202C | U20 |
| 3" | 147C | C | 203C | U30 |
| 4" | 149C | D | 204C | U40 |

The inlet threads shall be iron pipe threads of the same size as the valve.

B. Metal Housing or "Can": Shall be per Plate Nos. 13 and 14.

C. Service Lines: Type K soft copper per Section 3.5 (SERVICE LINE MATERIALS AND FITTINGS). There shall be a corp stop at the main per Section 3.5.

D. Ball Valves: James Jones 1900 or Ford B11-777 with a female iron pipe thread on each end and tee head.

E. Guard Posts: See Section 3.17 (MARKER POSTS).

3.10 BLOW-OFF ASSEMBLIES (PLATE NOS. 11 AND 12

A. 2 Inch Blow-Off: Reference Plate No. 11. Materials shall be as follows:

1. Service Line: Type K copper Section 3.5 (SERVICE LINE LATERALS AND FITTINGS), with a corp stop and saddle at main per Section 3.5.

2. 2" Ball Valve: James Jones 1900 or Ford B11-777 with female iron pipe thread on each end and tee head.

3. Vault: The same as for a meter installation up to 1". See Section 3.5 (SERVICE LINE MATERIALS AND FITTINGS).

4. Plastic Plug: This shall protect top of ball valve.

5. Corporation Stop: James Jones 1957SG or Ford FB 1100-7-Q-TA.

B. 4 Inch and 6 Inch Blow-Off: Reference Plate No. 12. Materials shall be as follows:

1. Service Line. 4" or 6" PVC per Section 3.8. There shall be a bottom outlet tee on the main per Section 3.4 that also discuss other miscellaneous fittings.

2. 4" or 6" Valve: Resilient-seated gate valve per Section 3.8.

3. Flanged Spool: Made of ductile iron per Section 3.4

4. 4" or 6" Brass Nipple.

5. 2” Ball Valve: James Jones 1900 or Ford B11-777 with female iron pipe thread on each end and tee head.

6. Vault: Concrete box with one-piece concrete cover with reading lid. Approved are Brooks 66-S or Quikset W30 that are 24”x36”.

7. Guard Posts: Required where an above ground blow-off is located in undeveloped areas. See Section 3.17 (MARKER POSTS).

## 3.11 FIRE HYDRANT ASSEMBLIES (PLATE NO. 9)

A. Hydrant Type: Fire hydrants for single family detached residential areas shall be wet barrel type meeting AWWA C503, and have a 6 inch flanged inlet with one 2 1/2 inch and one 4 inch valved outlets with National Standard fire hose threads. Fire hydrants for commercial and industrial projects and multiple dwelling areas shall one 4 inch and two 2 1/2 inch outlets. Where the required flow exceeds 3,000 gpm, there shall be two 4 inch and one 2 1/2 inch outlets. The outlets shall be protected with caps attached to the hydrant head with a chain. Other specific requirements are:

- The hydrant upper portion (above ground) may consist of either one or two sections.
- Hydrant materials are listed in AWWA C503.
- Hydrants shall be designed for a minimum working pressure of 150 psi (per AWWA C503).
- Hydrant flanges shall contain 6 equally spaced bolt holes of 7/8 inch diameter on a 9 3/8 inch diameter.
- All hydrants shall be permanently marked with the manufacturer's name and the year of manufacture.
- Caps shall be bronze.

Approved fire hydrants are the Clow 2000 series or James Jones J3700R series hydrants, unless the VCFPD requires a three-way hydrant, which requires special approval. Fire hydrant type and location shall be approved by the VCFPD.

B. Hydrant Lateral: 6-inch PVC pipe shall be used. Hydrant laterals shall be Class 200. See Section 3.3 (MAIN LINE PIPE MATERIALS) for material specifications. Also see Section 3.4 (MAIN LINE FITTINGS) for fittings description. Thrust block sizes are covered in Plate Nos. 15, 16, and 17. Where the fire hydrant also serves as a blow-off, the tee in the line shall be a "bottom outlet tee" specially made so that the flow will scour the bottom of the main line.

C. Hydrant Valve: Shall be a 6 inch valve (see Section 3.8 (WATER MAIN VALVES) with flange x ring-tite ends for PVC pipe discussed in Section 3.8.

D. Painting: See Section 3.16 (MATERIALS-PAINTING)

E. Spools and Bury: As shown on Standard Plate No. 9, a 6 x 6 flanged breakaway extension spool shall be used between the bury and fire hydrant. The spool shall be made of cast or ductile iron. It shall also be painted in accordance with that Section.

Hydrant buries shall be a 6 inch inside diameter and made of cast iron conforming to ASTM A-126. The buries shall be one piece with the top having a flange drilled with 6 holes to receive the extension spool or hydrant. The bottom shall have a 90° bend. The bury end shall be a push joint or mechanical joint fitting. Buries are generally available in 30", 36", 42" and 48" lengths. An approved product is "Rich Fire Hydrant Buries".

F. Bolts: Alloy steel break-off bolts shall be used to attach the fire hydrant to the extension spool.

G. Bottom Outlet Tee: Where fire hydrants are at low spots in the pipe line and essentially are also performing as a blow-off, a bottom outlet tee shall be substituted for the regular tee to facilitate flushing.

H. Main Line to Fire Hydrants: Separate lines used only for fire hydrants shall be a minimum of 8 inches in diameter. Actual size to be determined by District Engineer.

## 3.12 PIPE TRENCH MATERIALS

Refer to Plate No. 3 for trench cross-section terminology.

A. Within Pipe Zone: The pipe zone extends from the bottom of the trench to 12 inches above the top of the pipe. The material within this zone shall be a clean, well graded imported sand with sizes within the following ranges:

| Sieve Size | Percent Passing |
|---|---|
| No. 4 | 100 |
| No. 8 | 80-95 |
| No. 200 | 0-10 |

B. Above Pipe Zone: The materials shall conform to the requirements of the City's Public Works Department, Ventura County Public Works Department or the State of California, Division of Highways. In the absence of stricter requirements, the material above the pipe zone shall be native material that does not contain rocks larger than 6 inches and shall be made so graded that at least 40 percent of the material passes the NO. 4 sieve.

C. Special Slurry Backfill: For pipe lines that are laid in an already paved street, the City of Simi Valley Public Works Department may require the backfill above the pipe zone to be one sack slurry mix in lieu of compacted soil backfill. The slurry mix shall have no less than one sack of cement per cubic yard.

## 3.13 ROADWAY MATERIALS

Pavement materials (asphalt, aggregate base and aggregate sub-base) for resurfacing of trenches cut into existing pavement shall comply with the latest requirements of the City's Public Works Department, Ventura County Public Works Department or the State of California, Division of Highways.

## 3.14 CONCRETE MATERIAL

Approved concrete material shall be based on the 28 day compressive design strength and shall be chosen according to the following chart showing its intended use:

| Class | Application | 28 Day Strength (Min.) | Max. Aggregate Size | Slump Min. | Slump Max. |
|---|---|---|---|---|---|
| A | Walls, structures and reinforced structural encasement | 3,500 psi | 1 1/2" | 3" | 6" |
| B | Trust blocks, non-reinforced pipe encasement, non-structural use | 2,000 psi | 1 1/2" | 2" | 6" |
| C | Pump mix for abandoning lines | 2,000 psi | 3/8" | Adequate for Pumping | Adequate for Pumping |

3.15 REINFORCING STEEL

A. Bar Reinforcement: Shall be Grade 40 minimum deformed bars conforming to ASTM A615, accurately placed securely in position. Where bars are spliced they shall be lapped at least twenty (20) diameters or butt welded, except where otherwise shown on the plans.

B. Mesh Reinforcement: Mesh reinforcement shall conform to the requirements of ASTM A185; wire gauge and mesh dimensions will be as shown on the plans.

3.16 PAINTING

A. General: This section will only cover the paint materials. "Painting" as it relates to construction is discussed in Section 7.10 (CONSTRUCTION-PAINTING).

All paint colors shall be as specified or as selected by the District. Paints shall be delivered to the job site in original, unopened cans or packages bearing the brand name and manufacturer's name.

Paints specified shall be used unless specific written approval is obtained in advance to use other products.

B. Specific Material Requirements:

1. Fire Hydrants: Use Syn-Lux 876C (International Yellow) or Rustoleum enamel "School Bus Yellow" #7448. If hydrants are bronze, then first etch with Kopper's 40 passavator and coat with Carboline's Shop primer 1. The procedure is to first degrease metal surfaces with Carboline's thinner 10. Then Carboline's Multi-Bond 150 Alkyd or Carboline's Shop primer 1 should be used before the finish coats. Two finish coats are required.

2. Combination Air Release Cans: Prior to coating, the contractor shall submit color samples to the District for approval. These shall be painted as follows: Use Carboline's Rust Bond SG-epoxy (1 coat), Carboline's Shop primer (1 coat) and Hy-Lux Balboa beige, Baja beige #1105A, Green (Bayberry by DeVoe), or as approved for the particular installation.

3. Cast Iron Valves, Fittings and Miscellaneous Metal (except bronze). Exterior surface to receive 2 coats of Carboline's Bitumastic No. 50 (15 mil each).

4. Detector Checks/RP Devices: Prior to coating, the contractor shall submit color samples to the District for approval. Preferred colors can be shades of Tan, Green (Bayberry by DeVoe), and Gray. Paint shall be applied as specified in section 3.16 B1(Fire Hydrants).

In addition to the bitumastic coating, encapsulate all exterior surfaces including nuts and bolts with a 10-mil layer of plastic film wrap described in "C" (Plastic film wrap) below.

The interior of valves with the exception of bronze and working parts (see exceptions below) shall be coated with 100 percent solids, catalytically setting epoxy that is manufactured for use in the interior of potable water systems. The fusion method of coating 100 percent solid epoxy is acceptable. The two components shall be of different colors to aid in complete mixing. The epoxy lining shall be factory applied and field applications will not be allowed.

Exceptions to the above policy for interior coating require written approval in advance of delivery to the job site.

Fittings shall all be cement mortar lined or epoxy lined.

5. Steel Surfaces: Use one shop coat of rust penetrating Carboline's Multi-Bond 150 and one field coat of Carboline's Shop primer 1. Finish coats for inside locations to be 2 coats of Carboline's 890 (epoxy mastic). Finish coats for outside locations to be 2 coats of Carboline's 139 Alkyd Polyurethane (alkyd).

Cast iron and other bitumen-coated metals located above ground and/or in vaults shall receive two coats of Carboline's Multi-Bond 120 (synthetic resin with 48 hours drying time between coats). Finish coats in pressure regulating station vaults and other inside locations except meter vaults shall be two coats of Carboline's 890 (epoxy mastic). Finish coats for outside locations shall be two coats of Carboline's 139 Alkyd Polyurethane (alkyd).

6. Concrete and Masonry: Exterior surfaces shall receive one coat of Carboline's Flexxide Masonry Block Sealer, or Dutch Boy Block Coat No. 30W01; one coat of Dutch Boy Nalprep No. 019; and one coat of Dutch Boy Nalcrete, or two coats Carboline's Flexxide HB Elastamameric or 3359.

Exterior surfaces below ground shall receive two coats of Carboline's Bitumastic Super Service Black, 12 mils/coat, or approved equivalent.

Interior above ground surfaces shall receive one coat of Dutch Boy Masonry Vinyl Speed Primer No. 30W10 or Sentry's 500 resurfacer, and one coat of Dutch Boy Masonry Vinyl No. 32W11, or Koppers 601 Interior.

Interior below ground surfaces, such as in pressure reducing stations and lift stations, shall receive a cementitious seal coat of Sentry Semcrete 610. After at least three days, two coats of Carboline's flexxide HB Elastomeric or 3359 shall be applied.

7. Wood: Exterior locations shall receive one primer coat and two finish coats. Primer shall be one coat Carboline's 139 Alkyd Polyurethane (alkyd) thinned 20%. Finish shall be two coats of Carboline's 139 Alkyd Polyurethane (alkyd).
Interior wood surfaces shall receive one primer coat and two finish coats. Primer shall be one coat of Carboline's Multi-Bond 120. Finish coat shall be two coats of Carboline's 139 Alkyd Polyurethane(Alkyd).

C. Plastic Film Wrap: This wrap shall be used around all buried valves, bolted flanges and other fittings. The polyethylene film shall be of virgin polyethylene as produced by DuPont as Alathon resin and shall meet the requirements of ASTM Designation D 1248 for Type 1, Class A, Grade E-1, and shall have a flow rate or nominal melt index of 0.4 g/min. maximum.

The polyethylene film shall be 8 mils in thickness. The length shall be sufficient to firmly attach the film to the pipe on either side of the valve, flange or fitting. The following minimum flat sheet widths shall be used for the specified valve sizes:

| Nominal Valve Size | Minimum Flat Sheet Width |
|---|---|
| 4" | 24" |
| 6" | 24" |
| 8" | 24" |
| 10" | 30" |
| 12" | 36" |
| 16" | 48" |
| 18" | 48" |

At the contractor's option, tubular material may be purchased and cut with one side to fold out to the required width.

Tape for securing the polyethylene wrap shall be two (2) inch wide adhesive tape such as Polyken No. 900 (Polyethylene), Scotchrap No. 5 (Polyvinyl), or approved equal. The tape shall be such that the adhesive will bond securely to both metal surfaces and polyethylene film.

## 3.17 MARKER POSTS

In easements or where required on the plans, marker or guard posts shall be installed per the requirements of the District. Marker posts shall be constructed of 4" diameter, schedule 40 galvanized steel pipe, 5'6" in length. Marker posts shall be set 2'6" below the ground surface and centered in a concrete base of not less than 18" in diameter with a minimum of 3" of end cover.

Unless otherwise approved, marker posts shall be painted "school bus yellow" per Section 3.16 (MATERIALS, PAINTING).

# SECTION 4.0
# PLAN PREPARATION

## 4.1 GENERAL

The District has established procedures that must be followed in the preparation of plans. Deviations from these requirements, unless specifically authorized will be cause for rejection by the District. All engineers preparing plans should have in their possession a complete set of these Standards. All work shall be in ink on 4 mil. double mat Mylar sheets.

The design of and plan preparation for all system improvements and extensions or modifications shall be performed by or under the direct supervision of a professional engineer (engineer) with a current registration in the State of California in accordance with the California Business And Professions Code; Sections 6700-6706.3.

All design plans and specifications shall conform to the requirements of the Ventura County Waterworks District No. 8 (District). Where Federal, State, or District requirements are in conflict, the more restrictive requirements shall govern.

The engineer has a distinct responsibility to follow the progress of the work and to submit change orders or to incorporate "as-built" information on the drawings.

It should be understood that the responsibility for accuracy and completeness of the drawings rests with the developer's engineer. By signing the drawings, the Utilities engineer attests to the fact that they have been reviewed and that the Board of Directors has authorized construction.

## 4.2 SHEET SIZE AND MARGINS

Overall dimensions 24"x36" (600mm x 900mm). Margins shall be two inches (50mm) on left, all other 1/2 inch (13mm).

## 4.3 SIGNATURE BLOCK

All sheets of the plans shall have an approved signature block, see Plate No. 1. The approval blocks shall be signed before any construction occurs. Any changes to the plans after initial approval shall be shown as revisions and shall be approved by the District.

## 4.4 COVER SHEET

Cover sheets are available from the District in the preferred format in either a hard copy format for a small charge. The District also provides the preferred format cover sheet as an Auto Cad file on computer disk for a small fee or via e-mail at no charge. This shall be the first sheet in the set and shall contain:

A. Index Map: An index map with an overall plan at a scale of 1" = 300 ft. (25mm = 91m) showing general layout of water lines, sizes, valve and fire hydrant locations, named streets, tract boundaries, lot boundaries and numbers, a sheet index and other pertinent information. The

cover sheet shall include a note as to the pressure zone by number and elevation. Care must be exercised to make sure scale and orientation are correct since these index maps are used to produce a water atlas and incorrectly drawn maps will have to be redrawn.

B. Vicinity Map: A vicinity map with a scale of 1" = 1,000 ft. (25mm = 305m) showing tract boundary, streets, adjacent tracts, major streets outside of tract boundaries and the location of the benchmark.

C. Benchmarks: All benchmarks used in the project shall be graphically shown on this sheet and the elevations, descriptions, location, etc., spelled out as illustrated below:

BM No. _____ Elev. _____ F.B. _____ Page _____
Type of Marker _____
Location _____

All elevations used in preparation of standard plans shall be based on either National Geodetic Vertical Datum of 1929 (NGVD 29) or the North American Vertical Datum of 1988 (NAVD 88).

D. The general notes shall be shown on the key map sheet and need not be shown on the other sheets. The general notes shall include a note requiring compliance with these standards and five-day notice prior to beginning construction (see Section 4.11).

E. Water service certification by the engineer is required and shall be worded as follows:

CERTIFICATION

I hereby certify that the water system as shown on Drawing Number ___, Sheets ___ through ____has been designed to adequately provide each and every lot (or facilities) of this tract (project) with proper water pressure and fire flow.

| _____ | _____ | _____ |
|---|---|---|
| Registered Civil Engineer | RCE No. | Date |

If the project does not involve specific lots, then substitute the words ".. designed to adequately provide for the development said system is intended to serve."

Further, the engineer's California registration stamp including license expiration date shall be placed on the cover sheet.

F. On the cover sheet shall be a block to be used for as-built information. It shall be as follows:

Material List

| Item | Supplier and/or Manufacturer | Model/Type No. | No. Each |
|---|---|---|---|
| Pipe | | | |
| Services | | | |
| Fire Hydrants | | | |
| Valves | | | |
| Brass Products | | | |

Prior to submittal of as-built drawings, the pertinent information shall be completed by the developer's engineer.

"As-built" certification by the engineer is also required. The wording shall be as follow:

"AS-BUILT" CERTIFICATE

I hereby certify that the work shown on Drawing Number ____, Sheet ____through ____ inclusive, marked "as-built" has been constructed in conformance with lines and grades as shown on said plans and referred specifications.

_____ _____ _____

Registered Civil Engineer RCE No. Date

G. Appropriate designation for Council approval to construct, located above title block (number and date to be completed by the District).

"Construction Resolution No. _____ Date _____".

The term "Construction Resolution" refers to the date when the City Council authorizes construction.

## 4.5 PLAN OF WATER SYSTEM

Plan drawings shall show location of water mains, service line locations and other structures in relation to survey lines and stations. Included shall be blow-offs, combination air release valves, main line valves, fire hydrants, thrust blocks, etc. Provide all data for horizontal deflections or curves and indicate limits of any easements. Any known pad locations that are adjacent to an easement should be shown as well as fences, walls, trees, etc., which are within a minimum of 25 feet of the easement. Show the footprint of any proposed structures within 50 feet of the proposed pipeline improvements and all driveway aprons. Show and label the pad elevation of any proposed new residential lots as well as the lot number and Assessors Parcel Number. Show and label, on the plans, the size and ownership of all existing and/or proposed underground utilities that cross or

parallel the water line. Facilities of other water purveyor mains shall be included on the plans where they exist.

## 4.6 PROFILE OF WATER SYSTEM

Profiles shall show the grade, including any vertical curve data, size, class and type of pipe and the distances involved with pipe types or sizes. Any special encasement required to carry loads on the pipe shall also be shown. Items such as valves and the other structures or appurtenant features listed for the plan shall also be shown on the profile. Show elevations to 0.01 foot of water line top of pipe. Any buried utility that crosses the water line, including but not necessarily limited to, and especially wastewater, gas, telephone, power, storm drains, television and oil lines, shall be shown and labeled on the profile. The grade of major paralleling lines within 5 feet (1.5mm) of the water line shall be shown as dashed.

The City/District is not responsible for the accuracy of the location of these underground lines. Approval of the water plans by the City/District does not constitute a representation as to the accuracy of the location of, or the existence or nonexistence of any underground utility, pipe, or structure within the limits of the project.

## 4.7 GRAPHIC SCALES AND NORTH ARROW

All plan and profile sheets shall contain:

A. A graphic scale, horizontal as well as vertical, illustrated such that a true representation is produced when the plans are reduced in size, and they shall be as follow:

| | | |
|---|---|---|
| Horizontal 1" | = | 40 feet (25mm = 7.6m). |
| Vertical 1" | = | 4 feet (25mm = 1.2m). |

Double scale drawings (i.e., 1" = 8 feet) may only be submitted where the predominant slope of the existing ground surface or any one sheet exceeds 15 percent. In such cases, the works "Double Scale" shall be boldly shown.

B. A north arrow oriented toward the top or to the right only, or as approved. Generally, north shall be oriented towards the top or right hand side of the plan portion of the sheet.

## 4.8 PROCEDURE FOR APPROVAL

Approval for improvement plans consists of two phases. Each phase consists of a series of requirements that must be met before final acceptance.

A. Requirements for authorization of construction (see Section 5 of these Standards).

B. Requirements for final acceptance (see Section 11 of these Standards).

## 4.9 PLAN CHECKING LIST

The following list is intended as a guideline to assist the preparer; it is not represented to be a complete list of requirements:

### CHECK LIST FOR PLAN CHECKING AND PROJECT REQUIREMENTS

#### COVER SHEET

- ❑ Standard size, title block, signature block
- ❑ Revision and engineer's block
- ❑ Key and vicinity map
- ❑ Include lot numbers and lot lines
- ❑ Sheet index
- ❑ Pressure zone and elevation
- ❑ Adjacent tracts and street layout
- ❑ Benchmark
- ❑ Design and as-built certificates
- ❑ Pressure in project and fire flow requirement
- ❑ General notes (Per Standard Plate No. 28)
- ❑ Underground service alert note
- ❑ Engineer's stamp and expiration date

#### GENERAL DESIGN

- ❑ Conform to master plans
- ❑ Check for oversizing requirements
- ❑ Check for pressure and fire flow
- ❑ Selection of pipe type(s)
- ❑ For any tie-ins to the District's existing system, provide instructions relative to sequencing, timing and thrust blocks

#### PLAN AND PROFILE SHEETS

- ❑ Graphic scales
- ❑ North arrows
- ❑ Water line stationing left to right
- ❑ Elevations to top of pipe
- ❑ Proper burial
- ❑ Curve data if there are curves
- ❑ Pipe size(s) and type(s)
- ❑ Street, curb dimensions, street names
- ❑ Lot boundaries
- ❑ Easements including line bearings and reference to any applicable record easement document
- ❑ Angle points - show deflection angle right or left moving up station
- ❑ Show valves, fire hydrants, combined air release and blow-offs

- VCFPD approval of fire hydrant type and location
- Where meter boxes not in sidewalk, show detail
- Lot numbers and pad elevations
- Assessor parcel number
- Locations of all Water Meters
- Label water meters by size and type
- Pipe Separation shall be in accordance with Standard Plate No. 4
- Thrust blocks

ADMINISTRATIVE BEFORE CONSTRUCTION OF MAIN(S)

- Agreement for construction
- Cost estimate
- Inspection and plan check fee
- Bonds and insurance
- Fire flow calculations
- Calleguas Ordinance #14 (District release or District receipt)
- Will Serve Letter

ADMINISTRATIVE DURING OR AFTER CONSTRUCTION OF MAIN(S)

- Change Order Fee
- Meter installation requests

## 4.10 STANDARD LANGUAGE FOR DEDICATION OF FACILITIES TO THE DISTRICT

The following language is intended as an example of standard language for the dedication of facilities to the District. It shall be modified if necessary to fit a particular set of circumstances.

A. Grant Deed, Quitclaim Deed, Bill of Sale or Other. All of its rights, title and interests in and to the water system, pipe lines, manholes and appurtenances thereto as located in, on, over, under and across streets, easements and rights-of-way shown on Tract ____ as per map thereof recorded in Book ____, Page _____, and shown on the easement(s) as per Document No. ____, recorded on _____ of Official Records, in the Office of the County Recorder, County of Ventura, State of California.

B. Easement Deed. An easement and right-of-way to lay, construct, repair, maintain, operate, renew and replace pipe line and appurtenances incidental thereto for the transportation of water with the rights to ingress and egress to and from same, in, over, under and across the following described real property in the County of Ventura, State of California, and rights to disturb the surface of the easement area or surface improvements constructed by the servient tenement wherein the responsibility for replacement or restoration shall belong to the servient tenement unless otherwise specified herein.

Additional language may be added by the District as required.

## 4.11 STANDARD NOTES

The General Notes shown on Plate No. 28 shall be included on the cover sheet as applicable. Standard Notes are subject to change to suit the needs of the District.

# SECTION 5.0
# FEES, CHARGES AND REQUIREMENTS FOR AUTHORIZATION OF CONSTRUCTION

## 5.1 GENERAL

Specific fee/charge amounts are adopted annually by either Board resolution(s) or ordinance(s). All fee/charge amounts are only adopted following the conducting of public hearings by the Board as required by law. Water Service Charges for metered accounts, unmetered construction purposes, automatic fire sprinkler/service, interconnection between existing and new systems, and Capital improvements are addressed in the District's "Water Rates". Water service pre-payments and service fees for installation, relocation or replacement of service, meters, meter boxes and angle stops are included in the City of Simi Valley's "Schedule of Service Charges". Copies of the current documents are available.

## 5.2 PLAN CHECK FEE

When water plans are first submitted, a plan check fee shall be paid to the District by the developer. This fee shall be at the current rates using the developer's engineer's estimate of the cost of the improvements. This estimate shall be the larger of: (1) the estimate cost using the engineer's projects or (2) the estimated cost using Plate No. 29 (current to time project goes to Board for authorization to construct). Such cost shall be approved by the District. The minimum plan check fee and the minimum change order fee shall be as established by Board resolution or ordinance. Under no circumstances shall refunds of the above fee be made. However, the plan check fee required may be increased if actual or subsequently estimated costs exceed that used for the initial fee calculation.

## 5.3 SUBMITTAL OF BLUELINE PRINTS (PLAN CHECK)

Two sets of the blueline prints of the proposed water improvements, one copy of the final tract map (where appropriate), one complete set of other than water improvement plans, and one copy of the developer's engineer's estimate shall be submitted, together with the plan check fee for the first plan check. Plans illustrating an incomplete design and drafting detail may not meet minimum standards and may be just cause for a rejection of the first plan check. The developer or developer's engineer shall submit preliminary plans completed in accordance with these standards. The developer and the developer's engineer should be aware that most projects involve several plan check/submittals before the drawings are deemed to be in satisfactory condition. Also required will be fire flow calculations including the criteria used in determining the size of the lines and adequacy of backbone facilities including reservoirs (see Section 2.2 WATER MAIN PRESSURES, CAPACITIES AND SIZES, for more details).

## 5.4 SPECIAL PROVISIONS

If there are unusual conditions that would require substantial deviation from the District Water Standards, particularly with respect to service pressures, such deviations should be submitted in writing prior to tentative map and/or development project approval, or in any case prior to submittal of the first plan check.

## 5.5 INSPECTION FEE

District staff analyzes the plans and materials as submitted and prepares and sends comments to the developer's engineer. Upon receipt of revised plans, the developer prepares a final cost estimate for the proposed improvements. The inspection fee amounts using the most current rates (percentage figures) and unit prices applicable at the time the project goes to the Board for authorization to construct shall be determined and paid. In addition, the following is applicable:

A. A minimum inspection fee shall be determined.

B. Construction inspection fees for special situations, as determined by the District, such as inspections on Saturdays, Sundays or City holidays or beyond normal working hours, shall be charged as follows:

1. For inspections of special situations during normal working hours, the current hourly billing rate for an inspector will be billed per hour worked.

2. For inspections during overtime periods, the current inspector rate per hour worked multiplied by a factor of 1 ½, plus 40 percent finger benefits, plus 30 percent for overhead.

3. For inspections during Sundays and holidays, the current inspector rate per hour worked, multiplied by a factor of 2, plus 40 percent fringe benefits, plus 30 percent for overhead.

## 5.6 EASEMENTS

Any easements necessary must have deeds submitted for checking at this time or must be shown on the tract map before recordation. Also see Sections 2.5 and 4.10 of these Standards for easement requirements.

## 5.7 AGREEMENTS, BONDS, AND INSURANCE CERTIFICATES

Staff will provide the developer with the proper forms and developer shall submit the following:

A. Agreement for construction of water facilities (in triplicate with notarized signatures).

B. Insurance policy certificate with limits as stated in "Agreement." Attention is particularly called to the District's requirements concerning submittal of an "Accord" form. The insurance certificate shall include general liability, auto liability, and workers' compensation insurance in amounts as required by the District or District Counsel. The District, its officers, employees and agents, shall be named as additional insureds. The notice of cancellation period must be no less than 30 days. Any reference in the cancellation clause to "endeavor to" or "but failure to mail such notice shall impose no obligation or liability of

any kind upon the company" must be deleted. Also, the words "This certificate is issued as a matter of information only and confers no rights on the certificate holder" must be deleted. If disclaimers cannot be deleted from the Accord form, then a signed warranty letter must be attached to the certificate.

C. The District reserves the right to request that the District's accord form be utilized. A faithful performance bond (in triplicate and notarized) equivalent to 100 percent of the estimated cost including contingencies of construction. Note: Certificates of deposit and letters of credit may be substituted.

D. A labor and materials bond (in triplicate and notarized) equivalent to 100 percent of the estimated cost. Note: Certificate of deposit or letter of credit may be substituted.

E. The developer shall have made arrangements with the Calleguas Municipal Water District to satisfy the requirements of their Ordinance No. 14 that assesses fees for capital projects. The District requires a copy of their "release" for the project.

## 5.8 WATER "WILL-SERVE" LETTER

Prior to or concurrent with any Board authorization to construct facilities or prior to any parcel receiving water service (one or both may be applicable), the District shall issue a water "Will Serve" letter indicating that the subject property lies within the District's service area and that the District will provide water service subject to certain terms, conditions and limitations as outlined in the water "Will Serve" letter, as required by these standards. For tracts, the issuance of a water "Will Serve" letter by the District shall normally precede recordation.

## 5.9 APPROVAL FOR CONSTRUCTION

Upon receipt of all documents, bonds, fees and checking for all documents, bonds and fees, staff shall prepare a resolution for Board action, which is accompanied by or refers to the following material:

- Original Water Plans
- Agreement for construction of water facilities
- Easement deeds and/or copy of final tract maps
- Faithful performance bond
- Labor and Materials Bond
- Sketch on legal size 300 scale and 1,000 scale maps

The District will sign the original plans only after approval by the Board, and will notify the developer's engineer that the plans are signed and available. The developer's engineer will then provide the District with two sets of blueline prints, and the original drawings will be returned to the developer's engineer until they are "as-built", at which time the originals become the District's property.

No construction should occur before the plans are signed and before the proper five-day District notification has been given. This notification will allow time for a pre-construction meeting of all interested parties.

The District and the developer have a direct relationship via the documents outline above. Therefore, to the extent possible, correspondence and verbal communication with the contractor or subcontractor should include the developer.

## 5.10 CAPITAL IMPROVEMENT CHARGE

Unless approved by the Director, no building permit issued or parcel of property shall be connected to the District's water system until the capital improvement charge has been paid. The capital improvement charge is based upon meter size, acreage and/or upon the intended use for the proposed building or project.

## 5.11 SERVICE LINE, FIRE HYDRANT OR METER INSTALLATION

In general, the developer will install the required service lines and fire hydrants as part of the developmental project. The District will then install the meter.

Single service line or fire hydrant connections to existing District owned pipe lines will only be done by the District along with the installation of the meter.

All work by the District shall be paid by the owner or developer. The charge for installation of a service connection shall be based upon prevailing costs of materials and labor plus fringe benefits and an allowance for overhead. Deposit amounts shall be required prior to installation of the meter or service. After installation, the actual cost will be determined and adjustments made, either in the form of a refund of part of the deposit amount or additional payment by the owner/developer.

## 5.12 MAIN LINE EXTENSION AND OVERSIZING AGREEMENTS AND LOCAL SHARES

In general, if any developer desires to enter into a reimbursement agreement with the District, such arrangements shall be made prior to the time authorization to construct the water lines (or system) is given by the Board. The reimbursement agreements for main line extensions involve future payments to the developer installing the improvement if and when the District receives funds from other benefiting properties. In the case of a District Contribution for oversizing a line, no District contribution can be considered unless the line is 10" or greater in diameter.

## 5.13 FEES FOR PLAN CHECKING AND TESTING OF BACKFLOW DEVICES

These are covered by Board resolution. Also, see Section 12 (CROSS CONNECTION AND BACK FLOW PREVENTION) of these standards.

# SECTION 6.0
# CONSTRUCTION STAKING

## 6.1 GENERAL REQUIREMENTS

Construction staking is the responsibility of the developer, its engineer, or contractor. When the term is used, it should be remembered that it encompasses construction pipe line markings that may not involve any staking, such as marking on pavement. Stakes or marks will be set parallel to the pipe line alignment at an offset distance and direction agreed upon with the contractor, but in no case shall construction stakes be offset more than 10 feet (3.0m). Stakes or marks will be set at no greater interval than 50 feet (15.2m) on straight alignments when the pipe line slope is 0.6 percent or more. For horizontally curved pipe lines at less than 0.6 percent slope the stake or mark interval shall be 10 feet (3.0m) and for curved pipe lines above 0.6 percent slope and for straight pipe lines below 0.6 percent slope the stake or mark interval shall be 25 feet (7.6m). It is recommended that cut sheets indicating station, offset and cut be provided to the District Inspector.

## 6.2 PRESERVATION OF STAKES

Construction stakes or construction markings shall be carefully preserved by the contractor until after the completed work has been accepted by the District. If two or more consecutive stakes are knocked out during construction, new stakes shall be set at the contractor's expense.

## 6.3 SERVICE LINES

For each service line, a stake shall be placed near the property line, referenced to show its location. If the meter box installation is not anticipated prior to field acceptance, then the stake shall be a minimum 2"x4" redwood post 2 feet in length with 18 inches buried.

## 6.4 "AS-BUILT"

The stationing for each service line is required on the "as-built" drawings.

# SECTION 7.0
# CONSTRUCTION

## 7.1 GENERAL REQUIREMENTS

This section describes the use of materials and workmanship to be employed in construction of the water system. The developer/engineer shall prepare such general and special specifications as are necessary to define the nature and location of the work, contractual arrangements, payment for work and any other matters discussed within the standards presented here.

A. Use of This Section: The construction section is intended to highlight the features of construction, which are deemed to be most significant. In any construction activity, the recommendations of the manufacturer of a product, especially where more stringent, should apply. Also, the omission of a particular practice, which is not considered to be a good construction technique common to the construction industry, should not be construed to mean that it is not required.

There are a number of construction activities, which pertain to all pipe types, and these will be presented first. Specialized activities unique to a particular pipe type will be covered separately.

Specific standards incorporated into this section by reference include:

- AWWA C206 "Field Welding of Steel Pipes"
- AWWA C900 "Polyvinyl Chloride (PVC) Pressure Pipe, 4 inches through 12 inches.
- AWWA Manual M11 "Steel Pipe - Design and Installation".
- AWWA Manual M16 "Work Practices for Asbestos-Cement Pipe".
- AWWA Manual M17 "Installation, Operation and Maintenance of Fire Hydrants".
- AWWA Manual M23 "PVC Pipe - Design and Installation".
- Standard Specifications for Public Works Construction.

The developer/contractor should refer to Section 3 (MATERIALS) along with this section and the respective plates. Section 9 (TESTING AND DISINFECTING WATER MAINS) describes testing and disinfection procedures and requirements.

B. Protection/Operation of Existing Water System: A primary concern of the District is the protection and operation of the existing water system. No developer or contractor will be allowed to operate any existing water valves or to cause a shutdown of any portion of the District's water system without prior approval from the District's representative. That representative may be either the District engineer, superintendent, or the construction inspector with approval from the superintendent. In general, any operation of valves in a planned shutdown will be done by District personnel. Any planned shutdown should be discussed at the pre-construction meeting or at least 3 working days in advance. Shutdowns will only be allowed if no other reasonable alternative exists, such as the use of a hot-tap connection in lieu of a Cut-in tee. When shutdowns are required in a part of the District system, the District will expect evaluation of whether the

shutdown should be done during the day or during the night. Contractor/developer economies shall be weighed less heavily in the decision than in the interruption and inconvenience to existing customers. Any shutdown shall involve a thorough notification plan for existing customers as well as the provision of bottled water, water tanks, etc., where appropriate.

C. Quality of Materials: Materials and equipment to be incorporated into the work shall be new and unused unless otherwise approved. In case a reference is not clear as to which of several available grades is desired, the highest quality material shall be used. When construction bids are received directly by the District such bids shall show the proposed pipe material and the manufacturer's name, if more than one type is allowed.

Contractor shall have at the job site or be able to supply upon request, certified copies of factory or laboratory test reports showing the strength characteristics of any materials used in the work. For all reinforced concrete work, he shall furnish in advance of pouring concrete and, if requested, the mix design and calculated concrete strength as prepared by the concrete supplier.

D. Substitutions: Where articles or materials are specified by brand or trade name, alternate materials or articles equal to those specified may be approved provided the request for approval is in writing accompanied by supporting data, in ample time to permit investigations without delaying the work. Unless substitutions have received prior approval, no deviation from the Standards will be allowed.

E. Quality of Workmanship: All work will be done by persons experienced in the specific work, under competent supervision and in a first class manner to the District's complete satisfaction. When work is being done directly for the District the contractor in the proposal shall name each subcontractor and no substitutions will be permitted without prior approval.

F. Defective Work: An defective materials or workmanship that shall become evident within one year after field acceptance of completed work shall be replaced or repaired without cost to the District. Refusal of the contractor to correct defective work that is clearly his responsibility will be considered just cause for exclusion from performing future work to be connected to the District's system. Such exclusion does not impair the District's right to bring legal action to correct the deficiencies as well as to withhold exoneration of performance and payment bonds.

G. City Inspection, Field Acceptance, and Guarantee Period: The District is responsible for inspection of all excavation, materials, pipe laying including appurtenant structures, trench backfill within the pipe zone and testing. All such work shall be available for inspection at all times. It will be the contractor's responsibility to provide a five (5) working day notice to the District prior to the start of any work. Such notification will allow for scheduling a pre-construction meeting between interested parties. Failure to provide proper notification may delay the starting date since the District may not be able to inspect the work and cannot accept any work for which inspection has not been arranged. It must be emphasized that the primary responsibility for compliance with all District requirements and standards rests with the developer and/or contractor. Any acceptance of a portion of the work by a construction inspector does not relieve the developer/contractor of this basic responsibility.

Field acceptance is made by the inspector and will not coincide with the date of Board acceptance of the work. However, the one-year guarantee period for all work shall begin as of Board acceptance. As mentioned in Section 7.1E (Quality of Workmanship), any defective work discovered during this period shall be repaired or replaced and a new one year period will begin for that corrected work.

Inspection hours are 7:30 am through 4:00 pm, Monday through Friday, unless otherwise approved in writing by the District Engineer. All requests for after hour, holiday or weekend inspection shall be submitted in advance by the developer such that the District Engineer can approve and issue written authorization at least 48 hours in advance. All after hours, holiday or weekend inspection will be subject to additional charges as discussed in Section 5.4 (Fees-Special Provisions).

H. Public Relations: The contractor shall conduct its affairs in a manner that will lessen the disturbance to residents in the vicinity of the work. In this regard, standard working hours are 7:00 a.m. to 7:00 p.m., Monday through Friday unless prior approval is received. The job site shall be maintained in a condition that shall bring no discredit to the District or its personnel, and all affected private improvements shall be restored to at least their original condition.

## 7.2 PERMITS

The developer or the developer's contractor shall obtain the following required permits as applicable:

A. Encroachment: Where construction will encroach into the public right-of-way, the contractor shall obtain all necessary encroachment permits. Within City of Simi Valley right-of-way, the permit is secured from the Public Works Department. Within the County areas, a similar permit is required from the County. Particular attention is called to Section 7.15 (Backfill and Compaction) and the appropriate Plates.

B. Explosives: Where the contractor anticipates the use of explosives in conjunction with the water construction, a blasting permit shall be first obtained from the Ventura County Sheriff's Department, and all nearby property owners shall be notified. These permits are discretionary and may not be given for a particular circumstance.

## 7.3 SHIPMENT AND DELIVERY

All pipes shall be braced and stulled to prevent damage during shipment. Any damaged pipe or fittings delivered and unloaded at trench side shall be removed by the contractor from the work site.

Handling of CMCL steel pipe, including off-loading and placement in the trench, shall be done using nylon (or other approved type of) rigging straps so as not to damage the pipe coatings.

Rigging straps shall be properly rated for the weight category of the lift. Chains shall not be allowed to come into contract with the pipe.

## 7.4 CLEARING AND GRUBBING

A. General: Clearing and grubbing that consists of removal of objectionable material from the right-of-way shall be done with caution such that existing underground improvements, adjacent property and trees and shrubbery that are not to be removed shall be protected from injury or damage.

Within water easements or rights-of-way, trees, shrubs, fences and all other improvements that have to be removed to permit construction and which are intended for replacement, shall be replaced in kind or size (excluding native trees under 2 inch diameter or native brush) or with approved substitutes unless permission to exclude such replacement is obtained from the owner/agency or granted by the District.

B. Removal and Disposal of Material: The contractor shall be responsible for leaving the site in a neat and finished appearance, free from debris or inflammable material. Disposal of removed material shall be in legally approved location(s).

C. Protected Trees: The developer and contractor should contact the City's Planning Department should trimming, removing, or construction around protected trees be required. In general, any work under or within the drip line of a protected tree may be subject to special requirements.

## 7.5 UTILITIES, EXISTING FACILITIES, AND CONCRETE REMOVAL

A. Abandonment: Refer to Section 8 (ABANDONMENT) regarding abandonment of existing water lines and/or structures.

B. Utilities and Existing Facilities: The existing utilities and/or facilities shown on the drawings or the location of which is made known to the contractor prior to excavation shall be protected from damage during the excavation and backfilling of trenches and, if damaged, shall be repaired by and at the contractor's expense. Any existing utility or facility not shown on the drawings or the location of which is not shown to the contractor in sufficient time to avoid damage, if inadvertently damaged during excavation, shall be repaired by the contractor; and adjustment in payment, if any, is subject to negotiation between the contractor and the developer without any District liability, unless it is a District sponsored project.

Whether expressly indicated on the drawings or not, all contractors shall call the Underground Service Alert prior to any construction of pipe lines. Failure to do so shall not relieve the contractor of any liability associated with disturbance/breakage of existing utilities.

In case it shall be necessary to remove any such utilities, facilities, or any portions thereof, the contractor shall notify the District and the owner of the structure. The contractor shall not

interfere with said utility and/or facility structures until disposition of the obstruction to the work has been determined and/or notice to relocate or remove has been given by the District or authorized agent of the owner of the utility and/or facility so effected.

The fact that any underground utility and/or facility is not shown on plans shall not relieve the contractor's responsibility to comply with these standards. It shall be the contractor's responsibility to ascertain prior to commencing work the existence of any underground utilities or facilities that may be subject to damage by reason of his operations.

The District will provide service line location services of existing services upon request and with satisfactory notification in advance. Refer to Section 1.3 (DEFINITION AND TERMS) for definition of service line.

C. Concrete, Masonry or Mortared Construction Removal: At locations shown on plans, portions of existing concrete pavement, curbs, gutters, sidewalks, foundations and other concrete or mortared structures shall be removed to the lines and elevations specified. Concrete structures or objects not shown or noted on the plans shall be removed where necessary and disposed of by the contractor.

Concrete removal operations in connection with the reconstruction of existing structures shall be performed without damage to any portion of the structure that is to remain in place. If damage occurs, the contractor shall repair any such damage at his own expense, to the satisfaction of the District. Repair/replacement of any sidewalks, curbs, and/or gutters shall be to the satisfaction of the City or County Public Works Department, as appropriate. Where existing reinforcement is to be incorporated in new work, such reinforcement shall be protected from damage and shall be thoroughly cleaned of all adhering material before being embedded in new concrete.

## 7.6 EXCAVATION AND TRENCHING

A. General: Trench excavation shall consist of all excavation involved in the grading and construction of the water line as shown on plans. The contractor shall perform all excavation of every description and of whatever substances encountered, to depths indicated on the drawings or otherwise specified or required. During excavation, material suitable for backfilling shall be piled in an orderly manner a sufficient distance from the banks of the trench to avoid overloading and to prevent slides or cave-ins. The material piles shall also not obstruct existing sidewalks or driveways unless it cannot be avoided. All excavated materials not required or unsuitable for backfill shall be removed per Section 7.4B (Removal and Disposal of Materials). Such grading shall be done as may be necessary to prevent surface water from flowing into trenches or other excavations, and any water from any source accumulating therein shall be removed by pumping or by other approved methods. Such sheeting and shoring shall be done as may be necessary for the protection of the work and for the safety of personnel.

Unless otherwise indicated, excavation shall be by open cut except that short sections of a trench may be tunneled if, in the opinion of the District, the pipe or duct can be safely and properly installed and backfill can be properly tamped in such tunnel sections.

If blasting is necessary, the contractor shall notify the District of the blasting schedule and procedures and obtain a blasting permit, and shall observe all reasonable precautions in protecting life and property.

B. Excavation: Excavation for water lines shall be made only after pipe and other necessary materials are delivered on the work site. After such delivery, trench excavation shall proceed as rapidly as possible, and the pipe installed and the trench backfilled without undue delay.

Where rock excavation is required, the rock shall be excavated to a minimum overdepth of 6 inches (150 mm) below the trench depths indicated on the drawings or specified. Overdepths in the rock excavation and unauthorized overdepths shall be backfilled with the same material as the bedding zone. Whenever wet or other wise unstable soil incapable of properly supporting and restraining the pipe as determined by the District is encountered in the bottom of the trench, such soil shall be removed to the depth required and the trench backfilled to the proper grade with an appropriate material between a course sand and a crushed rock to provide a stable foundation.

C. Shoring: All shoring for open excavations shall conform to the State of California, Department of Industrial Relations, Division of Industrial Safety "Construction Safety Orders."

The contractor shall be responsible for adequately shored and braced excavations so that the earth will not slide, move or settle, and so that all existing improvements of any kind will be fully protected from damage.

No shoring once installed shall be removed until the trench has been approved for backfill operations. Removal of shoring shall only be accomplished during backfill operations and in such a manner as to prevent any movement of the ground or damage to the pipe or other structures.

The contractor shall obtain and pay for all permits for any excavations over five (5) feet (1.52m) in depth into which a person is required to descend or any excavation less than five (5) feet (1.52m) in depth in soils where hazardous ground movement may be expected and into which a person is required to descend.

D. Trench Width and Grade: The width of the trench within the pipe zone shall be such that the clear space between the barrel of the pipe and the trench wall shall not exceed the amount detailed in the standard plates. In general, the following shall be adhered to:

TABLE 7-1

| Nominal Pipe Diameter | Trench Width | |
|---|---|---|
| | Minimum | Maximum |
| 6"-12" (150mm-300mm) | O.D. + 12" (300mm) | O.D. + 18" (450mm) |
| 14"-18"(350mm-450mm) | O.D. + 18" (450mm) | O.D. + 24" (600mm) |

Trench widths in excess of those shown may be as wide as necessary if for the explicit purpose of installing sheeting and bracing the performance of the work.

E. Pipe Subgrade: The trench bottom shall have a flat or semi-circular cross section. The bottom of the trench shall be graded and prepared to provide a firm and uniform bearing throughout the entire length of each joint except for required "bell holes" at joints. A coupling hole shall be excavated as necessary with sufficient length, width, and depth to permit assembly and provide a minimum clearance of 3 inches (75mm) below the coupling for a length of 6 inches (150mm) beyond the coupling.

See Section 7-7 (PIPE BEDDING AND LAYING) for specific requirements with respect to bedding.

## 7.7 PIPE BEDDING AND LAYING

A. General: This portion of the work includes the furnishing of all materials and their proper assembly to result in a first class water line installation true to line and grade and free from leaks, cracks, and obstructions.

Where choices are allowed, the contractor shall select such materials and construction methods as will result in a completed project in full accordance with these Standards. In that regard, refer to Section 3 (MATERIALS) and the Plates for additional details.

The contractor is warned that the approved water pipe line design is based upon a proper combination of pipe strength and pipe support. No acceptance will be given unless the work of trenching, bedding, laying, backfilling, and compaction is conscientiously done in accordance with the procedures outlined in these Standards.

Except as otherwise approved or included in permits, the maximum length of open trench at any one time shall be 600 feet, or the distance necessary to accommodate the amount of pipe installed in a single day, whichever is the greater.

Grades shall be transferred from ground surface to the bottom of the trench by experienced workers, using not less than three consecutive grade points in common, so that variations from a straight grade may be readily detected. Each length of pipe shall be laid on firm, approved bedding material as specified and shall have full bearing for its entire length between bell holes excavated in said bedding material to allow for unobstructed assembly of all joints. Adjustments of pipe to line and grade shall be made by scraping away or filling in and tamping approved

material under the body of the pipe. No wedging or blocking with wood or soil to support the pipe will be permitted. Under no circumstances will a contractor be allowed to dump backfill materials on top of a pipe that is not continuously supported in its final grade position.

Each pipe shall be laid true to line and grade and in such manner as to form a close concentric joint with the adjoining pipe, following manufacturer's instructions for the specific jointing method being used. Pipe shall not be laid when the engineer or inspector determines that the condition of the trench or weather is unstable. As the work progresses, the interior of the water line shall be cleared of all dirt and superfluous materials of every description. If the maximum width of the trench at the top of the pipe is exceeded, the contractor shall install such concrete cradling, pipe encasement or other bedding as may be required to support the added load of the backfill. Trenches shall be kept free from water until sufficient backfill has been applied to keep the pipe in place. At times when work is not in progress, open ends of pipe and fittings shall be securely closed to the satisfaction of the inspector so that no trench water, earth, or other substance will enter the pipe of fittings. Pipe or fittings damaged during assembly shall be removed and replaced.

B. Pipe Laid on Bedding vs. Earth Mounds: The key elements to the pipe bedding are that the pipe ultimately be continuously supported and that the full 4 inches of bedding material (imported sand or better) be placed under the pipe. Where pipe is to be laid where considerable amounts of rock or cobblestone or groundwater are present, then the continuous bedding method shall be used. Earth mounds may be used, if specifically approved by the inspector, in areas exhibiting ideal pipe laying conditions where there is clear demonstration that the 4" bedding material will be placed after the pipe is laid in the trench.

For the continuous bedding method, the trench bottom shall be over excavated a minimum of 4 inches and brought back to grade with imported bedding material, see Section 7.6B (Excavation and Trenching) for excavation in rock. Prior to lowering pipe into the trench, coupling holes shall be excavated in the bedding with sufficient length, width, and depth to permit assembly and provide a minimum of 2 inches below the coupling.

For the earth mound method, the mounds shall be compacted firmly and of a size adequate to suspend the pipe 4 inches above the trench bottom while maintaining the pipe true to grade. Each length of pipe shall be laid on two mounds with the center of each placed at approximately one-fifth the distance from each end. Coupling holes shall provide a minimum clearance of 2 inches. After assembly, the trench zone shall be properly backfilled with imported bedding material. The bedding material shall then be compacted utilizing appropriate methods to provide a firm and uniform bedding throughout the entire length of pipe.

C. Pipe Laying For Steel Pipe:

1. As mentioned in Section 7.3 (Shipment and Delivery) CML and CMCL steel pipe shall be handled with straps. Chains or bare cinch or choker type cables shall not be used. The slings shall be of sufficient width to prevent damage to the lining or coating.

Pipe shall not be lowered into the trench until the pipe bed has been brought to grade. Dirt and other foreign matter shall be removed from the interior and the machined ends before lowering into the trench. The sealing surfaces of all materials shall be kept clean during installation.

2. No welded joint shall be backfilled until it has been inspected by the District. Sufficient trench space shall be left open in the vicinity of each joint to permit visual inspection around the entire periphery of the joint.

3. Rubber Ring Joints. Except as noted under field joints and electrically bonded connections, join pipes in accordance with the following:

a. The ends of pipe and appurtenances shall be cleaned immediately before assembly, and assembly shall be made as recommended by the manufacturer. Each pipe joint shall not be deflected either vertically or horizontally beyond the limits recommended by the manufacturer.

Unless otherwise approved in writing based upon manufacturer instruction, stabbing or swinging the pipe into position is not acceptable for pipes above 10 inches in diameter. For smaller pipes it may be used providing the following is done:

- The minimum length of swing necessary to join the pipe should be used.
- The pipe end must be in perfect alignment with the receiving coupling.
- The pipe end must be thoroughly lubricated.
- The joints shall be "gauged" after installation.
- Methods meet the approval of the inspector. The contractor is aware that this procedure, if not properly executed, can result in impact damage in either the pipe coupling or the pipe spigot.

Gasket lubricants shall be non-toxic and water soluble specially prepared for use in potable water systems. After assembly, proper location of the gaskets shall be gaged with a manufacturer supplied feeler gauge.

When pipe laying is not in progress, the open ends of installed pipe shall be closed to prevent entrance of trench water into the line.

Whenever water is excluded from the interior of the pipe, enough backfill shall be placed on the pipe to prevent floatation. Any pipe that has floated shall be removed from the trench and the bedding corrected.

4. Inside Joints: Mortar lining of the interior joints shall be done with a mortar composed of one part cement to not more than 2 parts sand, dry mixed and moistened with sufficient water to permit caulking and troweling without crumbling. Sand shall be graded within the limits for plaster sand. Water shall be potable. Workability of the mortar may be improved by replacing not more than 7 percent, by weight, of the cement with hydrated lime, or by replacing not more than 30 percent by weight of the cement with an approved pozzolan.

When the pipe is smaller than 22 inches, the joint shall be finished by placing a sufficient amount of the joint mortar in the bell end of the section against the shoulder of the lining, just prior to installing it in the line. When the section has been laid in place, the joint shall be finished by pulling a rubber ball or the equivalent through the joint to finish it off smooth with the inside surface of the lining (swabbing).

The metal jumper rods will then be welded in place to form an electrical bond.

No pipe shall be placed into service or filled with water until at least 24 hours after the joints have been mortared.

5. Outside Joint: Mortar coating of the holdback section shall be as described below: Grout composed of one part cement to not more than two parts sand, thoroughly mixed with water to the consistency of thick cream. Sand gradation shall conform to the requirements of ASTM C33 except that 100 percent shall pass the No. 16 sieve. The joints shall be coated with cement-mortar, retained by suitable bands or diapers so as to bridge the joint and retain the grout without leakage. The diaper shall be made of heavy-duty sailcloth of sufficiently close weave to prevent cement loss from the mortar. The diapers shall be Mar-Mac fabric diapers or approved equal. The fabric shall be hemmed on each edge and shall contain a metal strap within each hem sufficiently longer than the circumference of the pipe to allow a secure attachment of the diaper to the pipe. The diaper width will depend on pipe size and design and shall be the width recommended by the manufacturer. The grout space, prior to filling, shall be flushed with water so that the surface of the joint to be in contact with the grout will be thoroughly moistened when the grout is poured. The joint shall be filled with grout by pouring from one side only, and shall be rodded with a wire or other flexible rod or vibrated so that the grout completely fills the joint recess by moving down one side of the pipe, around the bottom of the pipe, and up the opposite side. Pouring and rodding the grout shall be continued to allow completion of the filling of the entire joint recess in one operation. Care shall be taken to leave no unfilled space. The exposed portion of the grout at the top of the pipe shall be coated with a sealing compound or covered with burlap or moist earth.

6. Welded Joints: Field welding of joints shall be in accordance with AWWA C206. This specification pertains to automatic field welding by the metal arc-welding process and covers lap joints, butt joints and butt strap joints.

All welding shall be done by certified welders qualified in accordance with the standards of the American Welding Society. Welding electrodes shall comply with the requirements of ASTM Specification A233. Welding procedures shall meet qualifications of AWS Standard D10.9 "Qualification of Welding Procedures and Welders for Piping and Tubing."

Welds shall be applied by means of continuous stringer beads. Each bead shall be thoroughly cleaned and descaled before the succeeding bead is applied. The metal shall be deposited in successive layers and the minimum number of passes or beads in the completed weld shall be as follows:

| Steel Cylinder Thickness Inches | Fillet Weld Minimum Number of Passes |
|---|---|
| Smaller than 3/16" | 1 |
| 3/16" and 1/4" | 2 |
| 5/16" | 3 |
| 3/8" | 3 |

When welded joints are designated on the plans, the pipe may be joined with rubber gaskets as specified in the above provision for rubber ring joints in lieu of slip (lap) joints. The outside recess between the bell and spigot shall then be caulked with a rod to facilitate the welding. The weld shall be continuous for the full circumference of the pipe.

In all welding, undercutting of the base metal in pipe adjoining the weld is a defect and shall be repaired. Overlapping or burning back the inside or outside corner during the application of a fillet weld will not be permitted. The finished fillet weld must be free of grooves, deep valleys or ridges and contain no abrupt changes in section at the toe.

Lap or fillet welds shall have legs of equal size except when specified otherwise, and they shall have a throat profile that is straight to slightly convex. In no case will a throat with a concave surface be acceptable.

Small erection tack welds used in the assembly of joints need not be removed provided they are sound and do not exceed in size the subsequently applied root pass.

After the joints have been welded, each joint shall be grouted with cement mortar in the same manner as specified for rubber ring joints.

Butt Strap closure joints shall be completed in the trench after the pipe has been laid to the alignment and grade shown on the plans. They shall be field welded to the outside of the pipe along both edges by full circumferential fillet welds or one of the edges may be shop welded and the other field welded. A half of a standard five inch (5") pipe coupling shall be shop welded to the top section of the butt strap to permit access for mortaring the inside of the joint. Butt joints shall be accurately aligned and retained in position during the welding operation so that in the finished joint the abutting pipe sections shall not be misaligned by more that 20 percent of the pipe's thickness, or a maximum of 1/8 inch.

After welding and mortaring, this coupling shall be closed with a standard threaded pipe plug welded in place for sealing.

The interior of butt strap joints shall be finished in the same manner as bell and spigot joints.

The exterior of but strap joints shall be finished as described below:

- Wire mesh, 2"x4"x No. 13 gauge, clean and free from rust.

- Shall be applied to the exterior of the butt strap joints so that the wires on the 2-inch spacing run circumferentially around the pipe.
- The wires on the 4-inch spacing shall be crimped in such a manner that the mesh will be held 3/8 inch from the metal joint surface.
- The mesh shall be lapped in a minimum of 8 inches and shall be securely wired in position.
- The joint exterior shall then be coated with cement mortar to a minimum thickness of 1½".
- Immediately prior to applying mortar to the interior or exterior of the joints, a cement wash shall be applied to the metal surfaces to be coated.

7. Flanged Joints: Flange faces shall be wire brushed and gaskets shall be thoroughly cleaned just prior to joining. Double gaskets shall be used on each side of valves. Following the tightening of the bolts, all exposed metal surfaces including bolts and nuts shall be cleaned by wire brushing and then primed with Koppers Jet Set, or approved equal. Following application of the primer, the flanged joints shall be covered with fabric diapers as specified for rubber ring joints except that the diapers shall contain a metal insert within the fabric to provide sufficient clearance between the flanges and diapers to insure a minimum thickness of ½ inch coal tar coating covering all flanges, nuts and bolts. The former diapers shall then be filled from the top with Koppers hot bitumastic coupling compound. The joints shall be poured from one side only until the compound shows on the other side. All metal surfaces shall be coated with compound to a minimum thickness of ½ inch. See Section 3.4 (Main Line Fittings) for fitting materials.

8. Flexible Coupling Joints: Shall be completed in the trench after the pipe has been laid to the alignment and grade shown on the plans. Each pipe end for a distance of 6 to 8 inches back from the end shall be thoroughly cleaned to remove oil, dirt, loose scale, rust, and other foreign matter. Flanges, gaskets, and sleeves shall then be assembled on the pipe ends in accordance with the manufacturer's recommendations. Gaskets, pipe ends, and coupling sleeve flares shall be lubricated with a non-toxic vegetable soap compound to facilitate the joining. Coupling sleeves shall be accurately centered over the pipe ends and one pipe end shall touch the coupling sleeve centering stop if the coupling sleeve is so equipped.

Bolts shall be tightened to the torque recommended by the manufacturer with a torque wrench in the presence of the District. All exposed coupling and pipe metal surfaces shall be cleaned, primed, diapered, and encased with hot coal tar compound as specified for flanged joints. All bolts shall be coated with anti-seize compound suitable for the type of bolts specified and installed.

D. Pipe Laying for PVC Pipe: Pipe laying of PVC C900 pipe is very similar to that for steel pipe with the following exceptions:

1. Because it is a plastic product, the pipe should be covered with an opaque material if it is to be stored out of doors or exposed to sunlight for a prolonged period of time (45 days).

2. In obtaining a square end cut, a PVC pipe cutter is recommended, but conventional fine-tooth hand or power saws may be used.

3. Field beveling of pipe ends after cutting can be done with special beveling tools or with such items as rasps.

4. In making the pipe conform to a curve, the pipe lengths should first be assembled in a straight line and then bent as they are lowered into the trench.

5. All PVC pipe shall be installed with a 12 gauge insulated copper locator wire suitably fastened to the pipe and connected to all fittings in order to provide a signal for location purposes.

E. Pipe Laying for Ductile Iron Pipe: Where approved for use, ductile iron pipe shall be laid in accordance with manufacturer instructions and in general compliance with the applicable procedures as listed for steel pipe. Where specified, the District may request a specification for such installation practices. Specific attention shall be given to the placement of the polyethylene encasement wrap and any tapping of the pipe line for services and/or other main connections.

## 7.8 THRUST RESTRAINT

A. General: Thrust forces occur at any point in the distribution system where the pipe alignment changes or there is a change in the pipe cross-sectional area. Balancing thrust forces shall be accomplished through the use of bearing or gravity thrust blocks or the use of restrained joints. In special cases the District Engineer may allow a combination of the two methods.

B. Supporting of Valves: Valves and fittings shall be supported by the trench bottom and shall be independent of the pipe. When pouring thrust blocks around a fitting, the concrete should be under and around the fitting and not the joint.

C. Thrust Blocks: These shall be placed as shown on the plans or as required by Plates 15, 16, and 17. The concrete shall meet the requirements of Section 3.14 (Concrete Material). Care shall be taken to insure that the concrete is poured against undisturbed ground and the fitting to be anchored.

D. Joint Restraint: Various mechanical locking-type joint systems are available to provide longitudinal restraint (including flanged and welded joints). Restrained joint systems resist the thrust forces by distributing the resistance over the restrained pipe length. The necessary length of restrained pipe shall be determined by the design engineer and submitted to the District Engineer for review and approval.

1. Pipe Joint Restraint Systems**:** Pipe joint restraint systems to be used on domestic water mains for PVC C-900 pipe sizes 4-inch through 12-inch diameter and PVC C905 pipe sizes 16-inch through 24-inch diameter, and for Ductile Iron pipe sizes from 4-inch through 24-inch diameter. Joint restraint systems are classified as “compression joint” or “mechanical joint” for the specific type of pipe joint to be restrained.

a. Underwriter Laboratories (U.L.) and Factory Mutual (FM) certifications are required on all restraint systems.

b. Unless otherwise noted, restraint systems to be used on PVC C-900 and C-905 pipe shall meet or exceed A.S.T.M. Standard F1674-96, "Standard Test Methods for Joint Restraint Products for Use with PVC Pipe," or the latest revision thereof. Restraint systems used on ductile pipe shall meet or exceed U.L. Standard 194.

c. Each restraint system shall be packaged individually and include installation instructions.

d. Restrainer for PVC C-900/C-905 & Ductile Iron Push-on Type Connections:

(1) Pipe restraints shall be utilized to prevent movement for push-on D.I. or P.V.C. (C-900 & C-905) (compression type) bell and spigot pipe connections or where a Dresser style (flexible) coupling has been used to join two sections of plain-end pipe D.I. or P.V.C. (C-900 & C-905). The restrainer may be adapted to connect a plain end D.I. or P.V.C. pipe to a ductile iron mechanical joint (MJ) bell fitting. The restrainer must not be directionally sensitive.

(2) The pipe shall be restrained by a split retainer band. The band shall be cast ductile iron, meeting or exceeding ASTM A536-80, Grade 65-45-12. The inside face or contact surface of the band shall be sufficient width to incorporate cast or machined non-directionally sensitive serrations to grip the outside circumference of the pipe. The serrations shall provide full (360 degrees) contact and maintain pipe roundness and avoid any localized points of stress. The split band casting shall be designed to "bottom-out" before clamping bolt forces (110 ft-lb minimum torque) can over-stress the pipe, but will provide full non-directionally sensitive restraint at the rated pressures.

(3) Bolts and nuts used to attach the split retainer ring shall comply with ANSI B 18.2.1/18.2.2, SAE Grade 5. Tee-bolts, nuts, and restraining rods shall be fabricated from high-strength, low-alloy steel per AWWA C111-90.

(4) The split ring type non-directionally sensitive restrainer system shall be capable of a test pressure twice the maximum sustained working pressure listed in section D and be for both D.I. and/or P.V.C. (C-900) sizes six thru twelve inch.

(5) Restrain systems sizes six thru twelve shall be capable of use for both ductile iron and/or P.V.C. C-900.

(6) The restraint system may consist of two types: the two split retainer rings and for new construction use only the one split and one solid cast backup ring.

e. Compression Ring Fitting Restrainer for Ductile Iron Pipe & PVC C-900:

(1) Compression ring with follower gland type of restrainer may be utilized in conjunction with Mechanical Joint (MJ) bell end ductile iron pipefittings for restraining PVC C-900 and ductile iron pipe.

(2) The system shall utilize a standard MJ gasket with a color-coded compression ring and replacement gland conforming to ASTM A 536-80, Grade 65-45-12.

(3) Standard MJ fitting Tee-bolts and nuts shall be fabricated from high strength steel conforming to AWWA C-111/A21.11-90 and AWWA C-153/A21.53-88.

(4) Standard MJ gasket shall be virgin SBR meeting ASTM D-2000 3 BA 715 or 3 BA 515.

(5) The restraint system shall be capable of a test pressure twice the maximum sustained working pressure listed in Section D.

f. Retainer Gland for Ductile Iron Pipe (Only):

(1) Radial bolt type restrainer systems shall be limited to ductile iron pipe in conjunction with Mechanical Joint (MJ) bell end pipe or fittings. The system shall utilize a standard MJ gasket with a ductile iron replacement gland conforming to ASTM A 536-80. The glad dimensions shall conform with standard MJ bolt circle criteria.

(2) Individual wedge restrainers shall be ductile iron heat treated to a minimum hardness of 370 BHN. The wedges screws shall be compressed to the outside wall of the pipe using a shoulder bolt and twist-off nuts to insure proper actuating of the restraining system.

(3) Standard MJ fitting Tee-bolts and nuts shall be high strength steel conforming to AWWA C-111/A21.11.90 and C-153/A21.53-88.

(4) Standard MJ gasket shall be virgin SBR meeting ASTM D-2000 3 BA 715 or 3 BA 515.

(5) The retainer gland system shall be capable of a test pressure of twice the maximum sustained working pressure listed below:

| Diameter (Inches) | PVC C-900 | Ductile Iron | PVC C-905 |
|---|---|---|---|
| 6 | 200 p.s.i. | 350 p.s.i. | NA |
| 8 | 200 p.s.i. | 250 p.s.i. | NA |
| 10 & 12 | 200 p.s.i. | 200 p.s.i. | NA |
| 14 & 16 | 200 p.s.i. | 200 p.s.i. | 235 p.s.i. |
| 20 & 24 | 200 p.s.i. | 200 p.s.i. | 235 p.s.i |

## 7.9 HOT TAPPING

Hot tapping shall only be done in the presence of the District representative. Section 3.8 (MAIN LINE VALVES) discusses the tapping sleeve and valve requirements. Hot Taps shall only be allowed if the tap is two pipe sizes smaller than the existing main line. The tapping mechanism shall be of the self-purging type so that cutting chips are removed from the tapping machine and do not enter the pipeline.

## 7.10 SERVICE CONNECTIONS AND SERVICE LINES

Generally, service saddles and dry tapping are approved except that with AC pipe the District may require the developer/contractor to install heavy wall tap couplings (see Section 3.3-MAIN LINE PIPE MATERIALS). The specified method shall be listed on the cover sheet of the plans.

Service connections on the opposite sides of the pipe are not allowed. There shall be a minimum of 1 foot (0.30m) between them. On PVC the taps shall be staggered vertically to prevent a split in the pipe.

With service saddles, file the surface of AC pipe (or clean other pipes as necessary) to remove all loose material before placing the saddle on the pipe.

In all metal-to-metal threaded connections, use either Teflon tape or sealing compound approved for use in potable water.

Service lines shall be one continuous length of copper pipe "snaked" within the trench to allow for expansion or contraction. Refer to Plates 18 through 20 for services up to 2 inches. For 3 inches and larger meters refer to Plate 21.

## 7.11 INSTALLATION OF VALVES AND FITTINGS

Valves and fittings shall be installed at the locations and grades shown on the plans. The following items comprise a checklist:

- The weight of the valve or fittings is to be taken by firm ground or blocking and not the pipe.
- All materials are covered in sections 3.4 (MAIN LINE FITTINGS), 3.8 (MAIN LINE VALVES), and 3.16 (MATERIALS-PAINTING).
- Valves and all bolted connections shall be coated and receive a plastic film wrap (see Section 3.16 - MATERIALS-PAINTING) installed as follows: The valves shall be wrapped by passing the flat sheet of film under the valve bottom and bringing the ends up around the body to the stem and securing it in place with 2 inch strips of the plastic adhesive tape. The polyethylene shall be secured around the valve stem in such a manner as to leave the stem free to operate. The film shall be brought completely around the flanges and secured to the pipe with a plastic adhesive tape on either side of the valve, flange, or fitting.

- All bolted connections shall be performed in an even manner by a series of tightening steps so that no portion of the bolted connection is over stressed.
- All bolts shall be coated with anti-seize compound suitable for the type of bolts specified and installed.

## 7.12 INSTALLATION OF AIR RELEASE AND BLOW-OFF ASSEMBLIES

Combination air release and blow-off assemblies shall be installed as shown on Plate Nos. 11 through 14. The developer/contractor shall locate the combination air release cans and blow-off vaults in a suitable location with respect to the adjacent properties. This shall include locating them closer to property lines rather than in the middle of a property where there could be future objections from the property owner. The service line to the assembly shall have a positive grade to prevent accumulations of air.

Refer to Section 3.5 for copper tubing connections. The service line shall be one continuous length without fittings between the corp stop to the air release valve riser. The corp shall be stacked at the main with 8-inch PVC and valve box if 2 inches or larger.

Dielectric connections with PVC tape wrap shall be provided at all connections between steel, brass, or bronze. See Plate No. 24.

## 7.13 INSTALLATION OF FIRE HYDRANT ASSEMBLIES

Fire hydrant assemblies are to be installed in accordance with the general instructions contained in AWWA C600 and AWWA Manual No. M17. Materials are covered in Section 3.11 (FIRE HYDRANT ASSEMBLIES) and the installation is shown on Plate No. 9. Special attention is called to the following:

- The 2 feet (0.60m) setback from the curb face must be adhered to regardless of whether the curb is next to a private street or within a private street parking lot. <u>The 2 feet dimension is from the curb face to the nearest portion of the fire hydrant and is not to the fire hydrant centerline.</u>
- The elbow in the fire hydrant bury must be anchored on a concrete thrust block.
- The fire hydrant shall be positioned so that the bolts between the extension piece and the hydrant are accessible, both top and bottom within the limits shown on Plate No. 9. If the hydrant is either too low or too high, it shall be corrected.
- Painting shall be per Section 3.16 (MATERIALS-PAINTING) with <u>all</u> metal surfaces above ground being painted including any extensions. It is suggested that the extension piece be painted before pouring the sidewalk.
- All underground flanges shall be wrapped with a plastic film per Sections 3.16 (MATERIALS-PAINTING) and 7.11 (INSTALLATION OF VALVES AND FITTINGS).

## 7.14 INSTALLATION OF METER BOXES, PRESSURE REGULATORS

A. General: Specific installation details are shown on the following plates:

| Plate No. | Type |
|---|---|
| 18 | ¾" and 1" meter |
| 19 | 1½" and 2" meter |
| 20 | 2" compound meter |
| 21 | 3" and larger compound meter |

Information concerning the sizing of meters is presented in Section 2.12 (PROPER SIZING OF WATER METERS AND SERVICE LINES). In all cases, the District will select the meter type and install the meter after proper arrangements (see Section 5 - FEES, CHARGES AND REQUIREMENTS FOR AUTHORIZATION OF CONSTRUCTION) have been made.

B. Meter Boxes: These shall be set with the longitudinal axis perpendicular with the street and located as shown in Plate No. 8 with respect to the curb. Only in special circumstances shall they be located within driveways. In instances where meter boxes must be within the traveled right-of-way, special written approval is required and the cover must be a cast iron traffic lid. All lids shall have provisions for touch and read meters.

With the exception of irrigation meters, spacers (or jumpers) will be placed within the meter box until the District installs the meter. The contractor may utilize spaces provided by the District on an "as available" basis. Care must be taken to avoid placing a strain on the spacer through misalignment of the house or service line.

Spacers (or jumpers) can be placed with irrigation meter boxes, however the jumpers shall be locked off until payment of fees. Once fee payment has been confirmed, District crews will set the irrigation meters. Irrigation meters shall be set prior to the construction of any irrigation plumbing.

C. Jurisdiction: All pipes on the customer side of the meter box are under the jurisdiction of the City of Simi Valley, Building and Safety Division if the property is within the City. If it is within the County, then the Ventura County Building and Safety Department has jurisdiction.

D. Pressure Regulators: Wherever the normal operating pressure at the house or building exceeds 80 psi, then a pressure regulator is required. For convenience, the houses or buildings requiring regulators are shown on the plans, but this does not relieve the developer/contractor's responsibility to check the pressure of each house or building. The types of regulators and their installation are as required by the regulators and their installation are as required by the respective Building and Safety Division/Department. Also refer to Section 2.2.C (Pressure).

## 7.15 BACKFILL AND COMPACTION

A. General: There are several distinct zones to be considered in the backfilling procedure as follows (refer to Plate No. 3):

- Pipe Zone - This area is from the trench bottom to 12 inches (300mm) above the pipe. This zone is to be backfilled under the strict jurisdiction of the District.
- Above pipe zone but below pavement subgrade plus the zone including the subgrade and pavement - Backfill and compaction in existing streets and in the area above the pipe zone shall be in full accordance with the City or County encroachment permit issued for the specific work, and with the City or County land development specifications. In both cases, the filling of trenches shall be subject to approval by the City or County Public Works inspector who shall have full authority to order compaction tests to demonstrate the actual backfill density.

Section 3.12 (PIPE TRENCH MATERIAL) of these Standards contain the material designations for both the pipe zone and above pipe zone regions.

B. Backfilling Pipe Zone: Sand as specified in Section 3.12 (PIPE TRENCH MATERIAL) must be used and shall be placed in the pipe zone with particular attention to getting material to the underside of the pipe and fittings to provide a firm support along the full length of the pipe. Care shall be exercised in backfilling to prevent damage to the pipe or coating, as applicable. Backfill in the pipe zone may be either compacted by hand tamping methods or flooded into place in a single lift without hand working. In no case shall sufficient water be applied to float the pipe. See further discussion of flooding or jetting below in Section E. Acceptability of compaction in the pipe zone will be determined primarily by visual inspection and probing by the District's inspector to determine that no voids exist in the backfill. The backfill within the pipe zone shall meet the requirements of 90 percent relative compaction.

C. Backfilling Above Pipe Zone: The sequence of backfilling and compaction above the pipe zone (in public right- of-way, i.e., streets) shall be as directed by the District or County Public Works inspector, but in the absence of such instructions, the following procedure shall govern: Testing for pipe and joint leakage will be done after consolidation of the backfill to the top of the subgrade zone and after service lines have been installed to the property lines.

Backfill, compaction and resurfacing shall be scheduled so that existing public streets may be opened to normal traffic in accordance with the City or County encroachment permit, and so that the backfill operations closely follow the pipe laying avoiding open trenches overnight.

The trenches or excavations shall not be backfilled without prior inspection by the District's inspector. Such inspection does not relieve contractor from compliance with the testing of the water line that should be conducted after final assembly of main and service lines in consolidation of backfill as described above. Contractor shall assume the cost of removal and replacement of backfill necessary for correction of defective conditions revealed by testing.

If no pavement is to be placed, the backfill zone between the top of the pipe zone and the bottom of the subgrade zone or ground surface may be filled with approved native material. It shall be placed in lifts not exceeding 3 feet (0.91 m) in uncompacted thickness, and compacted by water or mechanical means so as to obtain 90 percent relative density, except for the subgrade zone, consisting of the space under pavement and/or shoulder to at least 2.5 feet (0.76 m) below finished road grade which shall be filled and compacted to the prevailing District or County requirements, without flooding or jetting.

If the work is in private property and not subject to public agency requirements, excavations shall be final, backfilled, compacted and finished to match original conditions as interpreted by the District Engineer as further described in Section 10 (WATER SYSTEM AND WORK AREA CLEAN-UP).

In traffic areas within public right-of-way where pavement is to be replaced, the City or County requirements may call for a cement sand slurry mixture to be used for trench backfill. This requirement will generally apply to repair trenches that are 2 feet or less in width. For trenches wider than 2 feet, the aforementioned procedures may be approved by the Public Works Department. It must be emphasized that the specific requirements above the pipe zone are within the jurisdiction of the Public Works Department and developers/contractors shall have a responsibility to investigate and comply with all applicable requirements.

Plate No. 25 presents the District Public Works Department trench repair requirements within the paved right-of- way.

D. Backfill by Tamping Method: Backfill material shall be placed in uniform layers of the thickness specified above. The moisture content of the backfill material shall be near or at the optimum required for compaction and each layer shall be tamped until compacted to the required minimum relative compaction. Heavy-duty compacting equipment having an overall weight in excess of 125 pounds shall not be used until backfill has been completed to a depth of 2 feet over the top of the pipe.

If hydro-hammer is used for compaction of overlying materials, at least 4 feet (1.22 m) of backfill must be placed over top of pipe prior to its use. This is required to insure that the pipe is not damaged.

E. Backfilling By Flooding or Water Settling Method or Jetting: This method should only be attempted where the trench drains naturally and in a fairly rapid manner. Also, the backfill material must be sufficiently granular to consolidate properly by this method and must not cause damage to surrounding structures or soils.

If flooding is used, sufficient time shall be allowed for the puddled or flooded mass in each layer to solidify until it will support the weight of a man before any overburden is placed on the pipe. Apply only enough water to give complete saturation of the backfill material. Drain off excess water or it will retard the drying and consolidation of the materials. Flooding, if used, shall be applied after pipe zone material is placed. However, to prevent floating of the pipe at a minimum, some material should be placed adjacent to and over the pipe to add weight.

In the pipe zone, the backfill material shall be placed in uniform layers of the thickness specified above. At the top of each layer, the trench shall be diked at suitable intervals depending on the slope, and the trench between dikes shall be filled with sufficient water to inundate the backfill materials. Visual inspection of the backfill must indicate settlement prior to placing the next layer of fill. Care shall be exercised to prevent floating the pipe.

Following the backfilling of the pipe zone, the trench shall be filled in uniform layers not to exceed 18 inches (450 mm) in thickness. Each layer of fill will be diked at suitable intervals depending upon the slope, and the area between the dikes flooded with water at repeated time intervals until the backfill is completely saturated. Visual inspection of the backfill must indicate settlement prior to placing the next layer of fill. The final layer shall also be saturated and after settlement occurs the surface will be prepared for final dressing or paving.

Jetting with water to saturate the trench backfill layers is an acceptable alternate to flooding. Jet holes shall be a maximum of 10 feet (3 m) apart and sufficient water should be applied to consolidate the backfill materials. Also, care must be taken not to push the jetting pipe down below the spring line of the pipe-causing disturbance to the pipe grade. Also, the materials should be jetted from the bottom upwards.

F. Compaction Tests: These tests shall be taken as determined by the District Inspector. The developer/contractor shall make all necessary excavation for the tests at locations selected by the District Inspector and shall refill and recompact these excavations to the specified densities.

## 7.16 RESURFACING AND RESTORATION

If the water work shall occur in streets where no paving exists, the contractor shall, in accordance with City and County requirements, leave the completed trenches in a suitably compacted condition for finish grading, placement of base material and paving by others.

If the work is within existing City or County streets, any required surfacing shall be in accordance with the City or County encroachment permit.

If the work has disturbed or damaged existing private streets, alleys, driveways or other improved surfaces, the damaged portions shall be removed and restored, including the provision of adequate subgrade where these operations have disturbed the original material.

Substructures removed or damaged on public or private property shall be restored or replaced unless such structures are designated on plans "to be abandoned". Such structures include but are not limited to trees, bushes, plantings, groundcover, mailboxes, fences, and sprinkler systems.

Any temporary paving, barricades or special provisions required by public agencies shall be furnished by the contractor as required.

## 7.17 BORING AND JACKING OPERATIONS

A. General: Placement of pipe by boring or jacking methods requires special District approval for each instance. However, as a general guideline, the following shall pertain:

1. Except for the use of air or water, the methods and equipment used in boring and jacking operations shall be optional to the contractor provided that the District reviews them prior to any work.

2. The placement of pipe shall be to the lines and grades shown on the plans.

3. Voids remaining outside the pipe (or carrier pipe if applicable) shall be backfilled with concrete.

4. Where a casing pipe is used, it shall be no less than 8 inches (200 mm) greater in diameter than the pipe to be installed.

5. The placement of pipe in casings shall be supported with redwood skids, shims or wedges to the lines and grades shown on the plans.

B. Bores: The boring machine shall cut a true circular bore to the required line and grade. The bored tunnel shall be no more than 2 inches (50 mm) larger in diameter than the maximum outside diameter of the casing or water pipe to be installed.

C. Jacked Steel Casings: In addition to applicable portions above, the following shall pertain:

1. Where casings are used, the size and wall thickness of the casing shall be at the contractor's option except that the minimum casing thickness shall be not less than 3/8 inch.

2. Field joints of steel casings shall be welded with a continuous circumferential weld.

3. The placement of pipe in casings shall be supported with redwood skids, shims or wedges to the lines and grades shown on the plans.

4. Prior to backfilling the annular space between the pipe and casing, the pipeline shall be tested in accordance with Section 9 (TESTING AND DISINFECTING WATER MAINS).

5. The annular space shall be backfilled with washed concrete sand blown or rammed into place until the entire cavity is filled. Concrete bulkheads shall be placed at each end of the cased section to retain the backfill material.

## 7.18 CONCRETE AND MORTAR WORK

A. Concrete:

1. Material: Concrete used for encasements, filling, blocking, piers and other typical water construction applications shall be transit-mixed concrete from a supervised batch plant which issues certified delivery tickets with each load, showing the mix proportions, mixing time, truck departure time and water added. Such certified tickets will be handed to the inspector at the time of delivery. Ready-mixed concrete shall be batched and handled in accordance with ASTM C94. Job mixed concrete shall be limited to that needed for patching and minor non-structural uses requiring one sack of cement or less. In these cases, the materials and workmanship shall be the same as if transit-mixed concrete had been used. The 28-day compressive design strength of concrete shall be chosen according to its intended use as outlined in Section 3.14 (CONCRETE MATERIAL) of these standards.

2. Placement: Concrete shall be placed in clean forms before its initial set begins, using the minimum amount of mixing water required for good workability. Concrete shall be worked into forms by rodding or vibrating to secure a dense homogeneous mass free from voids and rock pockets. All concrete shall be vibrated unless the inspector approves solely rodding to avoid having the concrete run out of the forms or trench.

3. Finish: Concrete surfaces where required shall be steel troweled to a smooth hard surface free from ridges, holes and surface roughness. Exposed walls shall be left with a surface finish comparable to that obtained with new plywood forms. Slabs and walkways shall be finished with a wood float unless otherwise specified. Corners and edges shall be neatly beveled. Surface defects shall be repaired to match the surrounding concrete.

B. Mortar: Mortar for general work (exclusive of ML & C steel pipe) shall consist of one part Type II Portland cement and two parts of sand, by volume, thoroughly mixed in a dry state before adding sufficient water to give the mortar a proper troweling consistency.

## 7.19 CONSTRUCTION WATER

The developer/contractor shall not take unmetered water from the District's water system. Instead, he should sign up at the District for one or more construction meters. After receipt of a deposit amount, the District crew will install the meter at the fire hydrant selected by the developer/contractor. Upon request, the District crew will move the hydrant to another spot. The developer/ contractor is not to move the construction meters. Refer to Section 5 (FEES, CHARGES AND REQUIREMENTS FOR AUTHORIZATION OF CONSTRUCTION) for charges for construction water. The developer/contractor is put on notice that unpaid invoices will result in removal of the construction meter.

## 7.20 PAINTING

Section 3.16 (MATERIALS-PAINTING) discusses the painting materials. They shall be opened and mixed at the job site. Workmanship shall be a kind and quality meeting the requirements of the best standards of the painting industry. All work shall be done by skilled and experienced painters. Surfaces to be painted shall first be thoroughly cleaned to remove dirt, loose scale, rust, oil, grease, and/or other foreign matter immediately prior to painting. Cleaning shall be done with abrasives, scrapers, wire brushes, and/or other approved means. Each coat shall be applied in such a manner as to assure an even, smooth, uniform adhering coat free from dirt, runs, brush marks and laps, and shall be applied as recommended by the manufacturer. Painting will not be permitted when freshly painted surfaces may become damaged by rain, fog or condensation or when inclement weather can be anticipated. Fresh paint damaged by the elements shall be replaced by the contractor at his expense. Drop cloths shall be used to protect floors, equipment, piping, and other exposed surfaces from spattering and spillage. Paint shall be allowed to dry thoroughly between application of successive coats. The manufacturer's recommended time between coats will be used as a guide by the Director as to when the next coat of paint may be applied. The District must give approval before successive coats are applied, unless otherwise approved.

The contractor shall notify the District after surface preparation and after the application of each successive coat of paint. Spray painting will not be permitted unless specifically authorized by the District.

## 7.21 SAFETY

Wherever the Contractor observes or otherwise becomes aware of any unsafe activity, condition, practice, or operation, the Contractor shall immediately discontinue said unsafe activity, condition, practice or operation, including any and all unsafe acts of subcontractors. If the District's inspector notifies the contractor of same, it shall be the contractor's responsibility to comply. In such instances, the advice shall not be construed as implying any District liability. Essential to proper safety is adherence to all Public Works Department traffic control requirements.

Contractor is to submit to the District a copy of their annual CAL OSHA permit and the letter notifying CAL OSHA of their work on the District's project.

# SECTION 8.0
# ABANDONMENT

## 8.1 GENERAL

All existing water lines or structures that are to be abandoned shall be indicated on the drawings by the developer's engineer. Lines that are in service and are proposed to be abandoned shall be replaced with a parallel line of equal or larger size. The Developer's Engineer shall demonstrate that the abandonment does not adversely affect the water system. All abandonments shall be approved by the District Engineer.

All abandonment and construction techniques shall be discussed with District staff and shall be approved in writing by the District Engineer prior to commencement of any such line abandonment work.

## 8.2 WATER LINES

Water lines to be abandoned shall be entirely filled by pumping concrete into them. The pump mix shall be a mixture sufficiently workable for the purposes intended and shall be a concrete mix of 2,000 psi (13.8 MPa) minimum. The engineer shall show on the drawings the approximate number of cubic yards of concrete that will be required for any particular reach.

## 8.3 STRUCTURES

Structures associated with lines to be abandoned shall be removed by the contractor/developer and given to the District if salvageable. All structures to be discarded shall be so identified on the project plans and approved for disposal by the District's representative prior to disposal. The Developer shall make all arraignments for the proper disposal of all discarded materials and/or equipment, including any materials identified as hazardous waste. All costs associated with the disposal of all discarded materials and/or equipment, including any materials identified as hazardous waste, shall be solely at the developer's expense.

## 8.4 SERVICE LINE

Service lines shall be abandoned and plugged at the main under the direction of the District Inspector. This includes complete removal of existing corporation stops or other valves at the main and insertion of a properly sized brass or stainless steel plug depending on material of main or saddle. No dissimilar metal plugs shall be allowed.

# SECTION 9.0
# TESTING AND DISINFECTING WATER MAINS

## 9.1 GENERAL

All completed water lines, as well as the service lines and appurtenant structures, will be tested by and at the expense of the contractor in the inspector's presence prior to field acceptance of the work. The contractor must correct all defects in workmanship or materials that become evident by inspection or testing at any time during the work. Testing will be done after the complete installation and compaction of all underground utilities, except as modified below.

## 9.2 HYDROSTATIC TESTING

A. General Requirements: The purpose of the hydrostatic test is both to test for the ability of the pipeline to withstand pressure and to test for an acceptable leakage. Hydrostatic tests shall be conducted in accordance with the following:

| Pipe Material | Criteria |
|---|---|
| Steel | - AWWA Manual of Water Supply Practices M11, Steel Pipe- A Guide for Design and Installation. |
| Polyvinyl Chloride (PVC) | - AWWA Manual of Water Supply Practices M23, PVC Pipe- Design and Installation, and<br>- ANSI/AWWA Standard C605; Underground Installation of Polyvinyl Chloride (PVC) Pressure Pipe and Fittings for Water. |
| Asbestos-Cement (AC) | - ANSI/AWWA Standard C603; Installation of Asbestos-Cement Pressure Pipe. |
| Ductile Iron (DI) | - AWWA Manual of Water Supply Practices M41, Ductile-Iron Pipe, and Fittings.<br>- ANSI/AWWA Standard C600; Installation of Ductile-Iron Water Mains and Their Appurtenances. |

After the pipe and all appurtenances have been laid and backfilled and compacted sufficiently for required restraint, they shall be subjected to a 4 hour hydrostatic pressure test. This test shall consist of subjecting the pipeline to a hydro-static pressure of 50 psi greater than pressure class designation of the pipe, as shown on the plans. This value for the test pressure shall be used for most installations. However, where the operating pressure exceeds 125 psi as called out on the cover sheet of the drawing then the test pressure shall not be less than 225 psi for Class 150 pipe or 250 psi for Class 200 pipe. This test pressure shall be at the low point in the section being tested and shall be corrected to the elevation of the test gauge. Test locations shall be designated by the District Inspector. The pressure test or retest shall be conducted any time after trench backfill compaction effort with heavy-duty compacting equipment having an overall weight in excess of 125 pounds (57 kg).

A secondary test may be required if service lines are brought down to a finish grade, or any other connections, are added that were not previously tested.

The maximum length of pipe to be included in any one test shall be not more than 2,500 feet (760 m) or the distance between valves, whichever is less. The contractor shall provide suitable test bulkheads, blocking, and fittings to permit such sectionalizing.

B. Preparation: The line shall be filled with water and placed under a slight pressure at least 24 hours prior to testing. While filling and immediately prior to testing, all air shall be expelled from the pipeline and whenever practical, water should be introduced from the low end of new system to facilitate the elimination of air in the pipeline prior to testing. Where air valves or other suitable outlets are not available for releasing air before applying the test, approved taps and fittings shall be installed and later securely plugged.

C. Procedure: The pipeline pressure shall be pumped up to the specified test pressure. Then the pumping shall be discontinued until the pressure in the line has dropped 10-15 psi, at which time the pressure shall again be pumped up to the specified test pressure. This procedure shall be repeated until 4 hours have elapsed from the time the specified test pressure was first applied. At the end of this period, the pressure shall be pumped up to the test pressure for the last time.

D. Leakage: Shall be considered as the total volume of water pumped into the pipeline during the 4-hour period, including the amount required in reaching the test pressure for the final time. Leakage shall not exceed the maximum allowable leakage per the following equation.

$$L = CND\frac{\sqrt{P}}{1850}$$

Where: L = Maximum allowable leakage in gallons per hour for section of pipe line tested.

N = Number of joints in length tested.
D = Diameter of pipe in inches.
P = Test pressure in psi.
C = 1.0 for reinforced concrete pressure pipe with rubber joints, cylinder type.
C = 3.0 for reinforced concrete pressure pipe with rubber joints, non-cylinder type.
C = 0.50 for cast iron pipe with mechanical or rubber gasket joints and asbestos-cement pipe.
C = 1.0 for other type of cast iron joints (caulked and other types of pipe).

No leakage is allowed for welded steel pipe with welded joints.

If leakage exceeds this rate, the weak points shall be located and stopped, and all defective pipe, fittings, valves, and other accessories discovered shall be removed and replaced with sound material and the test shall be repeated until the leakage test is passed. All perceptible leaks shall be similarly repaired.

E. Possible Causes for Test Failure: For information, the following is provided:

1. A hydrant valve held open by a piece of rag, wood, or some other foreign matter. When the valve is held slightly open, line pressure will be relieved through the hydrant drain.

2. Dirt or foreign material under the coupling gasket.

3. Pipe not sufficiently covered in trench.

4. Fittings and valves in test section not sufficiently blocked.

5. Corp. cocks not tightly closed.

6. Air in line (no relief valve).

7. Leakage through valve at end of test section.

8. Valve bonnet plug leaking.

9. Packing on valves and wet-barrel hydrants leaking.

10. Test pump leaking. Check valve as well as gate valve.

11. Curves not sufficiently thrust blocked.

12. Testing too long a section of pipeline.

13. Insufficient saturation time (24 hours).

14. Ruptured pipe - cracked, blown out.

15. Broken couplings.

16. Faulty accessory equipment - valves, fittings, hydrants, saddles, corps, relief valves.

17. Faulty test gauge.

18. Test pump suction line drawing air.

19. Fish-mouthed gasket.

## 9.3 ROLE OF FLUSHING

A. Purpose: All mains shall be flushed with potable water after completion of construction and prior to disinfection. The primary purpose of flushing is to remove the sediments and miscellaneous products of construction.

When the lines are placed into service or flushed adjacent to occupied houses or buildings, an effort should be made to visually observe and taste water from those homes or buildings (i.e., from a hose bib) or from a nearby fire hydrant to insure that no adverse tastes, odor or color problem has been created.

B. Procedure: All mains shall be flushed with potable water after completion of construction and prior to disinfection. Included shall be service lines, fire hydrants, valves, and all other accessories. The contractor shall provide a sufficient number of suitable outlets at the end(s) of the line(s) being sterilized in addition to those required by the plans, to permit the main to be flushed with water at a velocity of at least 2.5 feet per second (0.75 mps) over its entire length. The outlets provided shall meet the requirements for fittings as specified for the type main constructed. Drainage facilities shall be constructed such that the water lines cannot be contaminated through the flushing outlet. It should also be noted that certain contaminants, such as caked deposits, resist flushing at any velocity. Therefore, 2.5 fps should be considered a minimum.

TABLE 9-1
MINIMUM FLUSHING FLOW

| Pipe Size | Flow Rate to Produce 2.5 fps |
|---|---|
| 6" | 220 gpm (14 Lps*) |
| 8" | 390 gpm (25 Lps) |
| 10" | 610 gpm (38 Lps) |
| 12" | 880 gpm (55 Lps) |
| 14" | 1,200 gpm (75 Lps) |
| 16" | 1,565 gpm (100 Lps) |
| 18" | 1,980 gpm (125 Lps) |

*Liters per second

## 9.4 DISINFECTING WATER MAINS

A. Purpose: Disinfection consists of the following:

1. Preventing contaminating materials from entering the water mains during construction or repair and removing by flushing materials that may have entered the main.

2. Disinfecting any residual contamination that remain.

3. Determining the bacteriologic quality by laboratory test after disinfection.

B. Procedure: After flushing, the water mains shall be disinfected with one of the following:

- Liquid chlorine (gas at atmospheric pressure).
- Calcium hypochlorite - In granular form and a chlorine water solution is prepared by dissolving the granules in water.
- Sodium hypochlorite - Packaged in liquid form. A chlorine water solution is made by adding water.

Although three different application methods are discussed in AWWA C651, the District only allows the use of the Continuous Feed Method and the Slug Method. The Tablet Method is only allowed in instances where the other two methods are not practical. Use of the Tablet Method requires written special permission by the District Engineer.

1. Continuous Feed Method: This is the standard method in the District and should be used unless one of the other two methods is approved because this method is not practical. In the continuous feed method, water dosed with chlorine is fed continuously into line at a constant rate such that the chlorine concentration in the water in the pipe is maintained at a minimum 50 mg/l and a maximum of 100 mg/l available chlorine. The chlorine application shall not cease until the entire main is filled with the chlorine solution and all valves and hydrants shall be operated in order to disinfect the appurtenances. The chlorinated water shall then be retained in the main for a minimum 24-hour period. At the end of the 24-hour period, the chlorine residual shall be no less than 24 mg/l throughout the main. The following Table should be useful in determining the amount of chlorine:

TABLE 9-2
CHLORINE REQUIRED TO PRODUCE 50 MG/L CONCENTRATION IN 100 FEET (30.5M) OF PIPE

| Pipe Size | 100 Percent Chlorine | 1 Percent Chlorine Solution |
|---|---|---|
| 6" | Use 0.061 lb (28 g*) | 0.73 gal (2.8 L*) |
| 8" | Use 0.108 lb (49 g) | 1.30 gal (4.9 L) |
| 10" | Use 0.170 lb (77 g) | 2.04 gal (7.7 L) |
| 12" | Use 0.240 lb (109 g) | 2.88 gal (10.9 L) |

*g = grams; L = Liters; Source is AWWA C651

2. Slug Method: This method is generally not approved. It involves dosing the line with a moving slug of no less than 300 mg/l of chlorine and maintaining that concentration in any one section for at least 3 hours.

3. Tablet Method (By Special Permission Only): This method is only used in instances such as a fire line where the continuous feed method may not be practical. The use of the Tablet Method requires written permission of the District Engineer prior to the start of construction. The tablets shall be placed in the top of the pipe and care must be taken to fill the line at no more than 1 foot/second. AWWA C651 lists the number of tablets per section of pipe required to achieve a dose of 50 mg/l. For example, an 8- inch pipe 13 feet long requires 2 tablets per section; whereas, a 12-inch pipe requires 5 per section.

C. Final Flushing: After the applicable retention period, the heavily chlorinated water shall be flushed until the remaining chlorine residual is less than 1 mg/l and dechlorinate to 0%.

D. Bacteriologic Tests: 24 hours after final flushing and before the main is placed in service, the District will sample the water and test for bacteriologic quality. These tests are an indicator of adequate disinfection. Sample(s) shall be collected from the main ends except for mains over 2,500 feet in length where additional samples at intermediate points as determined by the District.

E. Repetition of Procedure: If the disinfection fails, then the procedure shall be repeated.

F. Procedure After Cutting into or Repairing Mains: Two procedures are recommended as follows:

1. Swabbing with hypochlorite where all pipe and fittings are swabbed on the interior with 5 percent hypochlorite solution before they are installed. This should be followed by flushing, preferably from both directions.

2. Slug method whereby a section of line is isolated and then fed a slug dosage of chlorine up to 500 mg/l for a minimum of 1/2 hour. Then the line is flushed.

## 9.5 BACKFILL MATERIALS

A. Gradation Curves and Sand Equivalency Determinations: Sieve analyses gradation curves and sand equivalency determinations shall be made by an independent testing laboratory on representative materials for the bedding and haunching materials. If requested, written results are to be submitted to the Utilities engineer for approval prior to backfilling with any of the tested material.

B. Compaction Tests: These tests as required along the pipeline shall be taken by an independent testing laboratory. The compaction requirement is discussed in Section 7.15 (BACKFILL AND COMPACTION). If requested, written results including the compaction curve shall be submitted in writing to the District Engineer.

## 9.6 TESTING FOR FIRE FLOW OR PRESSURE

In selected cases, the District may require a check of the fire flow or pressure following construction. In such instances, the developer/contractor shall assist either the District or the VCFPD, as appropriate.

# SECTION 10.0
# WATER SYSTEM AND WORK AREA CLEAN-UP

## 10.1 FINAL PROJECT CLEAN-UP

Once all pipeline systems have been installed, pressure tested, chlorinated, and flushed, the system can be field accepted providing the necessary clean-up has occurred. All valves shall be accessible with valve stacks clean. All structures including fire hydrants shall be properly painted, where required, and free from dirt, concrete or other spattered materials. The work site shall be cleaned of all construction debris and excess materials. All pre-existing public and private improvements, structures and/or facilities damaged during construction shall be restored to the original pre-existing condition of said improvements including but not limited to trees, shrubs, curbs, gutters, sidewalks, fences, grass, etc. Filled excavations in private property shall be neatly finished in a manner to facilitate natural drainage and eliminate hazards to persons or property. Also, all requirements of the City and/or County Public Works Department, as appropriate, shall have been met. The project shall be left in a final condition that brings no discredit to the District.

All clean-up and restoration work shall be performed by the contractor, applicant or developer at their cost. All work shall be subject to the approval of the District Representative.

# SECTION 11.0
# REQUIREMENTS FOR FINAL ACCEPTANCE

## 11.1 GENERAL

"Acceptance" of a project by the District can occur at different stages of the work. The following terms apply:

Partial Field Acceptance for Occupancy Clearance Purposes

This type of conditional acceptance may be given when occupancy is requested for certain units within a development project where the entire water system is not to a state of completion where it could be termed field accepted. In no event can occupancy clearances be given where satisfactory service cannot be assured. Also, clearance for occupancy does not imply that the District has waived any right to insist on repairs or corrections of punch list items subsequently identified in a final inspection of the entire water system.

Field Acceptance

This term defines a limited type of acceptance that can be given when the District Inspector and Water Services Manager (or representative) jointly inspect the project and agree that all requirements as shown on the approved project plan and specification and as required by these Standards have been met.

Final Acceptance

This term defines the full acceptance of the system improvements and is given when the district's Board of Directors formally accepts the development's water system improvements by resolution.

## 11.2 FIELD ACCEPTANCE

After satisfactory completion of the improvements, the District Inspector will provide a field acceptance letter to the District Engineer. However, it shall be the developer's responsibility to initiate action and to supply the required administrative items prior to official Board of Directors acceptance of the improvements.

## 11.3 "AS-BUILT" ORIGINALS

Original "As-Built" drawings and two sets of blueline prints shall be submitted to the District Engineer. The "As-Built" shall reflect the actual improvements made and give the accurate location of all new/or relocated facilities. The "As-Built" certificate, as defined in Section 4.0, paragraph F, shall be signed and shall appear on the cover sheet of the water plans.

It should be emphasized that the responsibility for accurate as-built drawings must involve active participation by the developer's engineer during the project. All changes, whether done through the formal change order or revision process or whether done, as a field adjustment shall be reflected on the as-built drawings.

## 11.4 NOTICE OF COMPLETION

The developer shall submit a copy of the recorded notice of completion of the water system to the District Engineer.

## 11.5 GRANT DEED

The developer shall submit the original unrecorded grant deed executed by the developer conveying the system to the District; this includes notarization of all signatures. Language to be used on grant deeds is as follows:

> "An easement and right-of-way to lay, construct, repair, maintain, operate, renew, replace pipeline and appurtenances incidental thereto for the transportation of water with the right of ingress and egress to and from same in, over, under and across the easement and with the right to disturb the surface of the easement area. Replacement or repair of improvements, including landscaping, which are disturbed, damaged or destroyed by the District in exercising the above described rights, will be the responsibility of the servient tenement, who shall bear the full cost, unless otherwise stated herein."

## 11.6 ITEMIZED COST/ADDITIONAL FEES

A certified and itemized copy of the cost of the facilities offered for dedication shall be submitted. Such certification shall consist of copies of the signed contractual agreement with any change orders. If the final cost is found to be more than the originally approved engineer's cost estimate, developer shall pay the City an additional amount of plan check fee and inspection fee, based on the difference between the estimate and the final cost, and based on the current rates of such fees.

## 11.7 OTHER ADMINISTRATIVE ITEMS/INCLUDING EASEMENTS

Depending upon the project, there can be other administrative items required before final acceptance. Examples are unpaid invoices, contractual requirements involving easements, etc.

## 11.8 FIFTY PERCENT OCCUPANCY

Board of Directors approval can be processed after fifty percent of the development has been completed.

## 11.9 APPROVAL FOR ACCEPTANCE

When all requirements (field and administrative) have been met, staff will prepare a resolution recommending Board of Directors acceptance of the improvements and exoneration of the performance and labor and material bonds (10 percent of the bonds remains in force until it is fully exonerated; generally this is for the one-year maintenance and guarantee period). The City of Simi Valley or County of Ventura Public Works Department may require additional requirements for final acceptance.

Whereas, the normal maintenance and guarantee period is one year and the bond retention is 10% of the final cost of construction; both of these may be increased if in the opinion of the District the normal period and amount are not sufficient.

## 11.10 STATUS DURING MAINTENANCE AND GUARANTEE PERIOD

The developer/contractor is responsible during the guarantee period for the proper performance and maintenance of the water system. Should District crews have to perform any of this work, the costs for it may be invoiced to the developer/contractor.

## 11.11 EXONERATION OF SURETY

Ninety percent (90%) of the final cost of the development will be exonerated upon acceptance by the Board of Directors unless determined otherwise by the District Board. Ten percent (10%) will be retained for the one-year guarantee period and then released upon written request by the developer.

# SECTION 12.0
# CROSS CONNECTIONS & BACKFLOW PREVENTION

## 12.1 GENERAL

According to the AWWA definition, "cross connection means any connection or structural arrangement between a public or a consumer's potable water system and any non-potable source or system through which backflow can occur. Bypass arrangements, jumper connections, removable sections, swivel or change-over devices and other temporary or permanent devices through which, or because of which, backflow can occur are considered cross connections."

Cross connections may be regarded as direct or indirect. A direct connection is an arrangement whereby a safe water system is physically joined to a system containing unsafe water, wastewater, or other waste. An indirect connection is an arrangement whereby unsafe water in a system may be blown, pulled by vacuum, or otherwise diverted into a safe water system.

To understand cross connection and backflow prevention, several other terms need definition. "Backflow" is generally defined as the flow of any foreign liquids, gasses, or other substances into the distribution pipelines of a potable supply of water from any other source or sources than the intended one. For backflow to occur, two conditions must be present: (1) a link must exist between the potable and the non-potable system; (2) the resultant flow produced by the differential pressure must be toward the potable system. If both systems are at pressures greater than atmospheric (positive pressure), backflow due to "back-pressure" occurs. A pump, elevated tank, or boiler can create a back- pressure that is greater than the pressure in the potable system.

If the potable system is at a pressure less than atmospheric (negative pressure), the atmospheric pressure on the foreign liquid will force it toward the partial vacuum and "back- siphonage" occurs. A more explicit term for backflow when subatmospheric pressure exists is back-siphonage. Back-siphonage is the backing up, or siphoning, of a foreign liquid into a potable water system.

## 12.2 JURISDICTION, AUTHORITY, REFERENCES

The District' requirements for backflow prevention are covered by the Ventura County Environmental Health Division.

The "Cross Connection Control Officer" for the District is the County of Ventura Environmental Health Division. They are responsible for ensuring that the devices are properly installed, maintained, and tested. The various protective devices are to be installed, maintained, and tested by and at the expense of the property owner.

A source of general information is a booklet titled "Cross Connections and Backflow Prevention" as published by AWWA.

## 12.3 TYPES OF BACKFLOW PREVENTION

As described below, there are several different types of protection devices. The "Reduced Pressure Principle Device" and "Double Check Valve" are used to prevent backflow and the former also prevents back-siphonage. The "Air Gap" and "Pressure or Atmospheric Vacuum Breakers" are used for prevention of back- siphonage. Descriptions of each device is as follows:

A. Reduced Pressure Principle Device (RP): Commonly referred to as an RP or RPP, this device consists of two independently acting check valves, together with an automatically operating pressure differential relief valve located between the two check valves. The first check valve reduces the supply pressure at a predetermined amount so that during normal flow, and at cessation of normal flow, the pressure between the two check valves shall be lower than the supply pressure. If either check valve leaks, the relief valve will discharge to atmosphere. This will maintain the pressure in the zone between the two check valves lower than the supply pressure. The unit also has two shutoff valves (one upstream and one downstream of the checks) and properly located test cocks for field testing.

B. Double Check Valve: The double check valve assembly is composed of two single, independently acting check valves. The unit also has two tightly closing shutoff valves located at each end of the device and four test cocks for the testing of the check valves.

The Double Check Detector Valve is specifically designed for use on fire protection system pipeline installations. The device protects potable water supplies from possible contamination through cross connection to fire service pipelines by preventing the return of "degraded fire system waters" into street supply mains which could happen when a VCFPD "pumper" connects to the system. This unit is also used to detect leakage or unauthorized use of water from fire system lines, which usage is immediately registered on the low flow meter on the unit.

C. Air Gap: An air gap is a physical separation between the free flowing discharge end of a potable pipeline and an open or non-pressure receiving vessel. To have an acceptable air gap, the end of the discharge pipe has to be at least twice the diameter of the pipe above the topmost rim of the receiving vessel, but in no case can this distance be less than one inch.

This may seem to be the simplest, most effective and least expensive type of protection. However, the chance for future cross connections, the cost of additional pumps to pressurize the system often makes this an expensive protection system.

D. Pressure Vacuum Breaker: The pressure vacuum breaker (or PVB for short) is a device that contains within a single body, a single loaded check valve and a loaded air opening valve which opens to admit air whenever the pressure within the body of the device approaches atmospheric. The body of the device has two tight closing shutoff valves and it is fitted with test cocks, appropriately placed, for testing the device.

E. Atmospheric Vacuum Breaker: An atmospheric vacuum breaker which has a moving element inside, which during flow prevents water from spilling from the device and during cessation of flow, drops down to provide a vent opening. This device should not remain under pressure for long durations and it cannot have any shutoff valve downstream from it.

## 12.4 REQUIREMENTS

Reference to the Ventura County Resource Management Agency for acceptable devices to be installed. In addition, the following is provided:

A. Reduced Pressure Principle Device (RP): Use where cross connections are known or probably will exist which cannot be eliminated and where the degree of severity is judged by the Cross Connection Control Officer to warrant more than a double check valve.

Specific Examples:

1. Water service to industrial or commercial facilities where chemicals are used within the premises that could potentially be harmful to the District system.

2. Water service to hospitals and doctors' offices for humans and animals.

3. Irrigation systems such as median or park strips along streets or landscape areas within projects that are subject to backpressure.

4. Fire sprinkler systems using chemical additives.

5. Water service to mortuaries.

B. Double Check Valve: Use where there is an auxiliary water source to the premises handled in separate piping systems. Also, use where a cross connection possibly exists where the substance would be objectionable, but not necessarily hazardous to health.

Specific Examples:

1. Service connections to homes or buildings that are also furnished water from wells.

2. Water service to buildings that use products that might impart an objectionable taste, odor, or color but would not be hazardous.

3. Food processing plants.

4. Community or project swimming pools.

C. Double Check Detector Valve: Use where there is no other meter between the water source and the building such as a fire service line for a sprinklered building.

Specific Example:

1. Fire service line for sprinklered building.

D. Air Gap: Use where there is a connection to any premise using a dangerous or toxic substance in toxic concentrations. The air gap shall be located as close as practicable to the service cock and all piping between the service cock and receiving tank shall be entirely visible. If these conditions can't be met, then use an RP device as directed by the Cross Connection Control Officer.

Specific Example:

1. A commercial installation where an air gap is required.

E. Pressure Vacuum Breaker (PVB): This unit can only be used where there can be no backpressure - only where there can be back-siphonage. The unit can have shutoff valves downstream of the device. The PVB must be installed at least 12" (0.3 mm) above the highest outlet or tank.

Specific Example:

1. Lawn irrigation system where outlets are situated well below the device and where there may be a shutoff valve downstream (or past) the device such as a hose bib.

F. Atmospheric Vacuum Breaker: As with the pressure type, there should be no possibility of backpressure. This device cannot have any shutoff valves downstream of the device. It must be installed at least 6" (150 mm) above the highest outlet or tank.

Specific Example:

1. Typical residential sprinkler system.

## 12.5 INSTALLATION

A. General: In terms of installation, there is an essential difference between "service" and "internal" protection. Service protection is a backflow device installed outside of the building, but on the customer side of the meter (with the exception of the detector check valve which doesn't have a meter). These devices are specifically intended to protect the District water system regardless of other protective devices inside the building.

Internal protection devices are installed within the building or facility.

B. Service Protection Devices: The owner/developer submits drawings of the building to the Building & Safety Department that may require an outside or service protection device. Also, the Public Works Department's Cross Connection Control Officer may require service protection after a survey of the facility once under construction or occupied unless internal cross connections are abated to the satisfaction of the Cross Connection Officer. In either case, the owner/developer should make arrangements with the Cross Connection Control Officer for inspection.

Once installed, the device will be recorded on District Engineer records and tested as discussed in Section 12.7 (TESTING AND MAINTENANCE).

C. Internal Protection: The installation of these devices falls under the jurisdiction of the Building & Safety Division and as approved to the satisfaction of the Public Works Department.

## 12.6 APPROVED DEVICES

Refer to the latest "List of Approved Backflow Prevention Assemblies", as issued by Ventura County's Environmental Resource Agency. It is intended for information and the Cross Connection Control Officer should be consulted for the currently approved list.

## 12.7 TESTING AND MAINTENANCE

All backflow prevention devices are to be tested annually by a certified tester with repairs or maintenance as needed. Owners of all devices that have been recorded on District Engineer records will be notified yearly of this responsibility and a form must be completed by the tester and returned to the District.

# SECTION 13
# RESERVOIRS, PUMPING STATIONS AND WELLS

## 13.1 GENERAL

Reservoirs, or storage tanks, work in conjunction with the pipeline and pumping stations to supply water for both the domestic and fire fighting purposes. These facilities must be designed for reliability. They must also be designed to be aesthetically pleasing with emphasis on minimization of their visibility. This section is not a design document. Rather, it is a limited discussion of a few key points.

## 13.2 RESERVOIR STORAGE

Reservoir storage is made up of three components - operational storage, emergency storage and fire storage. Emergency storage includes a sufficient volume to supply the highest anticipated fire flow within a particular zone. Regulatory storage is the volume required to supply the withdrawals from the system that exceed the average rate of water production (or inflow).

For purposes of design, the District Standard as modified in the February 1986 Master Plan (page 6-11) is for the following:

| | | |
|---|---|---|
| Operational Storage | = | 25% of MDD |
| Fire Storage | = | critical fire flow for a specified length of time as determined by the Ventura County Fire Protection District. Fire flow to be not less than 1,500 gpm at 20 psi for 4 hours. |
| Emergency Storage | = | one day of MDD |

Fire storage is defined as that amount of water that must be available to satisfy required fire flows for specified lengths of time. These requirements are set by the Ventura County Fire Protection District and are tabulated in Table 13-1. Thus, the governing factor is that land use category which required the greatest fire flow within a given pressure zone.

Operational storage is defined as that needed to equalize daily fluctuations in consumption. Because production and boosting facilities are usually maintained at constant rates, the operational storage provides the additional quantity for the peak demands. Refer to Section 2.2 (Water Main Pressures).

Emergency storage is defined as additional storage that is frequently required during scheduled maintenance of facilities, prolonged power outages, mechanical failures, pipeline breakages, and disruption of sources of supply. Operational and fire storage may not be adequate to operate a system under certain conditions, and additional storage. Thus, the amount of storage required to cover such emergencies varies depending on the vulnerability of the system.

The amount of storage required varies with the unique characteristics of a water system. The determination of storage requirements must be generated for each individual water system, or if a system consists of multiple pressure zones, then for each individual pressure zone. It is dependent strictly on the characteristics of a given water system (or pressure zone).

Refer to Section 2.2 (WATER MAIN PRESSURES, CAPACITIES AND SIZES).

## 13.3 RESERVOIR STRUCTURAL DESIGN

Reservoirs (tanks) must be designed to withstand all expected forces: internal pressure, wind load, earthquake load, the dead load of the structure and the live loads of the water when completely filled.

For steel tanks, AWWA D100 is the applicable standard for the welded tanks and AWWA D103 is the applicable standard for factory coated bolted steel tanks.

Reinforced concrete or prestressed concrete reservoirs are to be designed to the standards of the American Concrete Institute.

## 13.4 GENERAL RESERVOIR DESIGN PARAMETERS

Wherever possible, the entire reservoir shall be fully located on a pad that only involves cut grading. An alternate is to locate the reservoir on a pad that at all locations has at least 10 feet of compacted fill.

All new steel reservoirs shall have ring beams.

Unless otherwise determined, all steel reservoirs shall have a knuckle corner between the shell and roof.

All aboveground reservoirs shall have a "dog house" or flush clean-out in addition to an access manway.

All reservoirs shall have an altitude valve with a bypass.

All new reservoirs shall have ladders with safety climbs and solid cages.

All piping and electrical conduit attached to the tank shall allow for up to four inches of displacement in any direction.

## 13.5 PUMPING STATION DESIGN

Pumping stations shall be designed with a minimum of two pumps so that at least one unit can be considered a standby unit. Further, in any station, the required pumping capacity must be met with one pump of the largest size out of service.

Pumps, piping and controls shall be enclosed within a building structure impervious from weather or vandalism. The building shall be designed by a licensed architect or engineer experienced in the design of these facilities. The building shall be designed to fit the style and architecture of the surrounding community. The pump station building shall have a parapet type roof, equipped with fusible link type roof hatches centered over each pump and motor.

Each pump station shall be capable of supplying the maximum daily flow plus that flow necessary to replace one full fire flow storage in a period of 72 hours (3 days). Each pump station will have one standby pump with a capacity of the largest undivided pump at that station. At every pump station it is required that a control system be set up so that each pump operates approximately the same amount of time in any given period. Pump motors shall be of the high efficiency variety.

## 13.6 SCADA SYSTEM

All reservoir levels and pumping station parameters (i.e., pump run, pump call, pump off, flow rate, pressures, pump hours, valve malfunctions, etc.) are telemetered to the Public Services Center which houses the SCADA computer and central control by radio.

## 13.7 FACILITY SCREENING AND PAINTING

A. Water Storage Tanks: All water storage tanks shall be screened and painted in accordance the following requirements:

1. All proposed water storage tanks shall be screened from view to the maximum extent through the efficient use of the natural terrain, earthen berms and landscaping.

2. Prior to a project being deemed complete the applicant shall provide detailed viewshed exhibits, including but not limited to line of site studies and landscape exhibits showing the proposed tank screening methods for each proposed on-site and off-site water storage tank in the development.

3. Prior to the issuance of any grading permits, staged grading permits, or zone clearance, the applicant shall complete landscape plans, grading plans, and viewshed exhibits for each proposed water storage tank and submit the plans and exhibits to the City's Landscape Architect for review and approval.

4. Prior to a project being deemed complete, the applicant shall geologically evaluate and certify each proposed water storage tank site as suitable for the construction of the proposed water storage tank.

5. Any tank site relocation after a project is deemed complete shall require a modification to the original project application.

6. All proposed water storage tanks shall be painted the color “Bayberry” as manufactured by DeVoe or approved equal.

7. Prior to the issue of any grading permit, staged grading permit, or zone clearance, applicant shall complete engineered drawings for each proposed water storage tank and submit the plans to the District engineer for review and approval.

B. Pump Stations: All applicable conditions as specified in section 13.7A (Water Storage Tanks) shall apply to this section.

## 13.8 WATER WELLS

As a definition, the term "well" or "water well" means any excavation constructed by any method for the purpose of extracting water from or injecting water into, the underground. Wells do not include: (a) Oil and gas wells or geothermal wells, (b) Wells used for the purpose of dewatering construction.

Wells within the District's water service area, and within the City of Simi Valley must be designed and constructed in accordance with the City of Simi Valley's well ordinance, and should receive a permit from the Flood Control and Water Resources Department, County of Ventura, although approval by the District shall first be sought. The District shall be contacted regarding the inspection of construction, repair, modification, abandonment or destruction of wells.

TABLE 13-1

VENTURA COUNTY WATERWORKS DISTRICT NO. 8
RECOMMENDED FIRE FLOWS[(a)]

| LAND USE CATEGORY | FIRE FLOW (gpm) | DURATION (hrs) |
|---|---|---|
| RESIDENTIAL | | |
| Residential Estate, Very Low, Low Density (0-3 D.U./Acre) | 1500 [(b)] | 4 |
| Medium, Intermediate, Mobile Home, Mobile Home Subdivision Density (3.1-10 D.U./Acre) | 1500 | 4 |
| High, Very High Density (10.0-18.1 + D.U./Acre) | 2500 | 4 |
| COMMERCIAL | | |
| Recreational Commercial, Office, General, District, Sub-Regional, Railroad Depot | 3500 | 4 |
| INDUSTRIAL | | |
| Light Industrial, Business Park, Industrial Reserve, Airport | 4500 | 4 |

| LAND USE CATEGORY | FIRE FLOW (gpm) | DURATION (hrs) |
|---|---|---|
| PUBLIC & SEMI-PUBLIC | | |
| Community Service [c] | | |
| Parks | 3500 | 4 |
| Hospitals | 1500 [b] | 4 |
| Schools - Elementary | 3500 | 4 |
| - Junior High and Special Education | 2000 | 4 |
| - Senior High | 2500 | 4 |
| | 3000 | 4 |

D.U.: Dwelling Unit

[a] Values obtained from Ventura County Waterworks District No. 8, 1985 Water Master Plan.

[b] Ventura County Waterworks District No. 8 specifies a minimum fire flow of 1500 gpm for 4 hours.

[c] Community Service includes Civic Center, Public Services Center, Fire Station, Law Enforcement Office, Library, Churches, Cemetery, Brandeis-Bardin Institute, and Sanitary Landfill

# SECTION 14
## STANDARD PLATES

TABLE OF STANDARD PLATES


| | |
|---|---|
| Plate No. 1 | Standard Title & Revision Blocks |
| Plate No. 2 | Standard Symbols |
| Plate No. 3 | Trench Terminology and Standard Dimensions |
| Plate No. 4 | Separation Requirements for Water & Wastewater Lines |
| Plate No. 5 | Pipeline Encasements |
| Plate No. 6 | Water Main Connections at Intersections |
| Plate No. 7 | Valve Assembly Details |
| Plate No. 8 | Location of Hydrants & Meters |
| Plate No. 9 | Fire Hydrant Installation |
| Plate No. 10 | Miscellaneous Details - Fire Hydrant & Air/Vac. Valves |
| Plate No. 11 | 2" Blow-Off Installation |
| Plate No. 12 | 4" Blow-Off Installation |
| Plate No. 13 | Combination Air Release and Vacuum Valve Installation |
| Plate No. 14 | Combination Air Release and Vacuum Valve for Special Installation |
| Plate No. 15 | Anchor Blocks |
| Plate No. 16 | Thrust Blocks for Push Joint/Mechanical Joint Connections |
| Plate No. 17 | Thrust and Anchor Block Sizes |
| Plate No. 18 | 3/4" and 1" Water Meter Service Installation |
| Plate No. 19 | 2" Turbo Water Meter Service Installation |
| Plate No. 20 | 2" Compound Water Meter Service Installation |
| Plate No. 21 | 3" Meter and Larger Installation |
| Plate No. 22 | Reduced Pressure Principle Assembly |
| Plate No. 23 | Fire Service Backflow Preventer |
| Plate No. 24 | Dissimilar Pipe Connections |
| Plate No. 25 | Trench Repair Within Paved Right-of-Way |
| Plate No. 26 | Water Sample Station |
| Plate No. 27 | Pipe Anchors and Backfill Stabilizers |
| Plate No. 28 | General Notes - Water |
| Plate No. 29 | Unit Costs for Estimating |

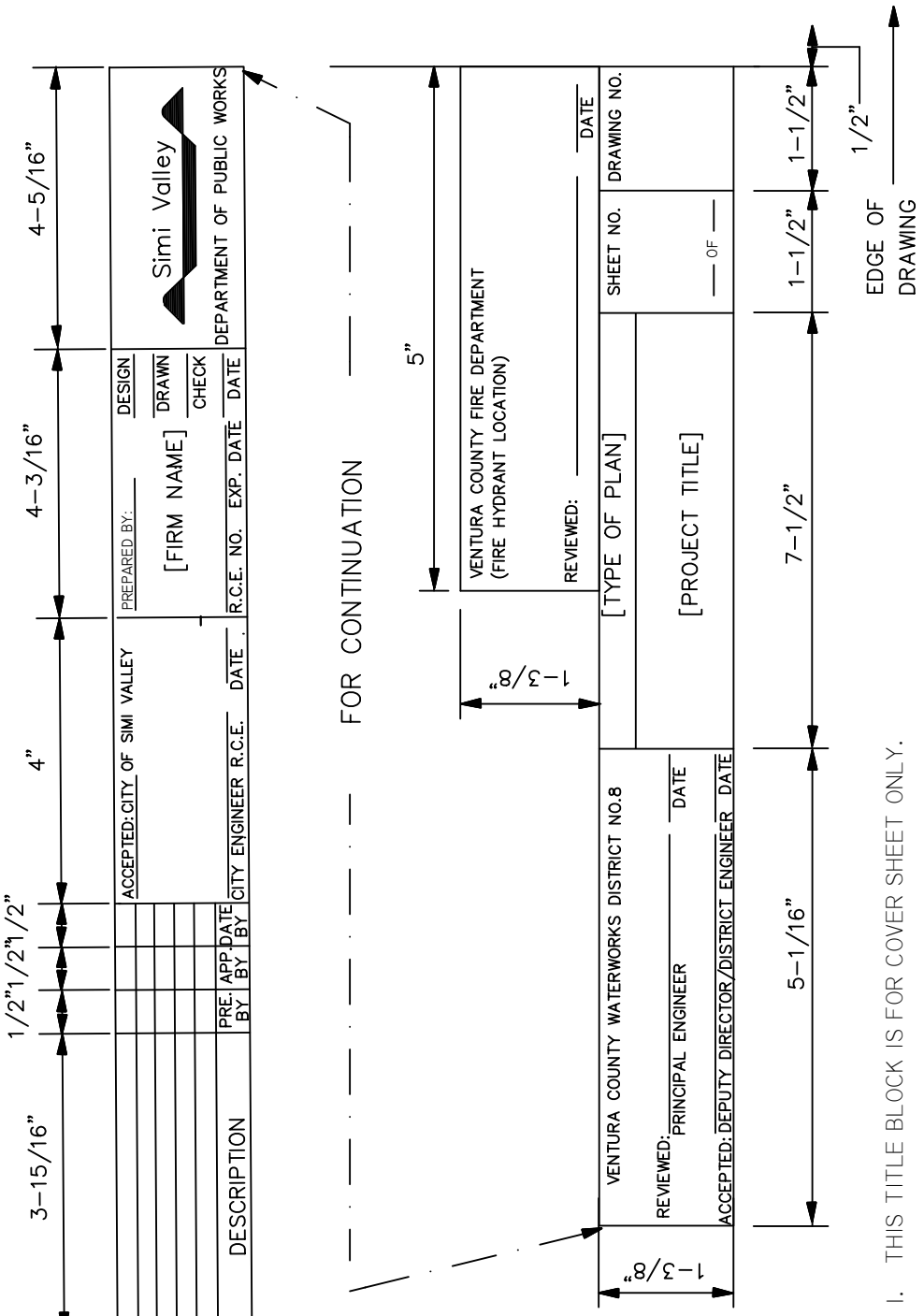


DISTRICT
COVER SHEET ONLY

1. THIS TITLE BLOCK IS FOR COVER SHEET ONLY.
2. TITLE BLOCK SHALL CONTAIN THE TRACT OR OTHER PROJECT IDENTIFYING NUMBER AS WELL AS "WATER" AND THE TERM "COVER SHEET" OR STREET NAMES(S) AS APPLICABLE.
3. DEPUTY DIRECTOR MAY SIGN FOR THE DIRECTOR ON ANY PLANS.
4. REVISIONS (OR CHANGE ORDERS) MUST BE SIGNED BY THE DISTRICT ENGINEER OR ENGINEER DESIGNATED BY THE DISTRICT ENGINEER.

| | | |
|---|---|---|
| City of Simi Valley<br>DEPARTMENT OF PUBLIC WORKS | VENTURA COUNTY WATERWORKS DISTRICT NO. 8 | PLATE |
| | STANDARD TITLE &<br>REVISION BLOCKS | 1<br>1 OF 3 |
| DISTRICT ENGINEERING | RECOMMENDED: /S/<br>DEPUTY DIR./DISTRICT ENGR. | APPROVED: /S/<br>DIRECTOR OF PUBLIC WORKS |
| | | JAN 00 |

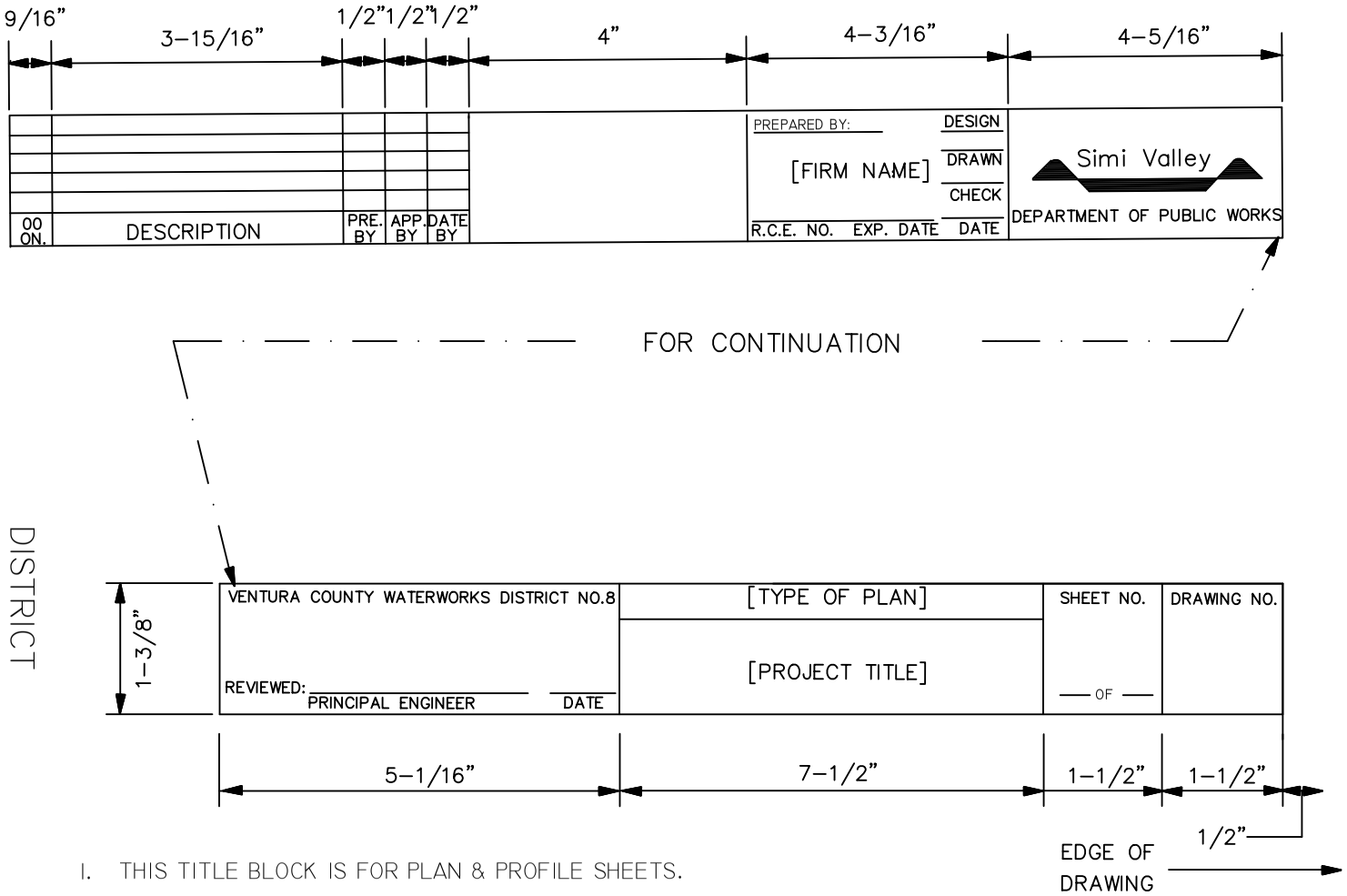


1. THIS TITLE BLOCK IS FOR PLAN & PROFILE SHEETS.
2. TITLE BLOCK SHALL CONTAIN THE TRACT OR OTHER PROJECT IDENTIFYING NUMBER AS WELL AS "WATER" AND THE TERM "COVER SHEET" OR STREET NAMES(S) AS APPLICABLE.
3. DEPUTY DIRECTOR MAY SIGN FOR THE DIRECTOR ON ANY PLANS.
4. REVISIONS (OR CHANGE ORDERS) MUST BE SIGNED BY THE DISTRICT ENGINEER OR ENGINEER DESIGNATED BY THE DISTRICT ENGINEER.

DISTRICT
PLAN & PROFILE SHEETS

City of Simi Valley
DEPARTMENT OF PUBLIC WORKS
DISTRICT ENGINEERING

RECOMMENDED: /S/
DEPUTY DIR./DISTRICT ENGR.

APPROVED: /S/
DIRECTOR OF PUBLIC WORKS

VENTURA COUNTY WATERWORKS DISTRICT NO. 8

STANDARD TITLE &
REVISION BLOCKS

PLATE
1
2 OF 3

JAN 00

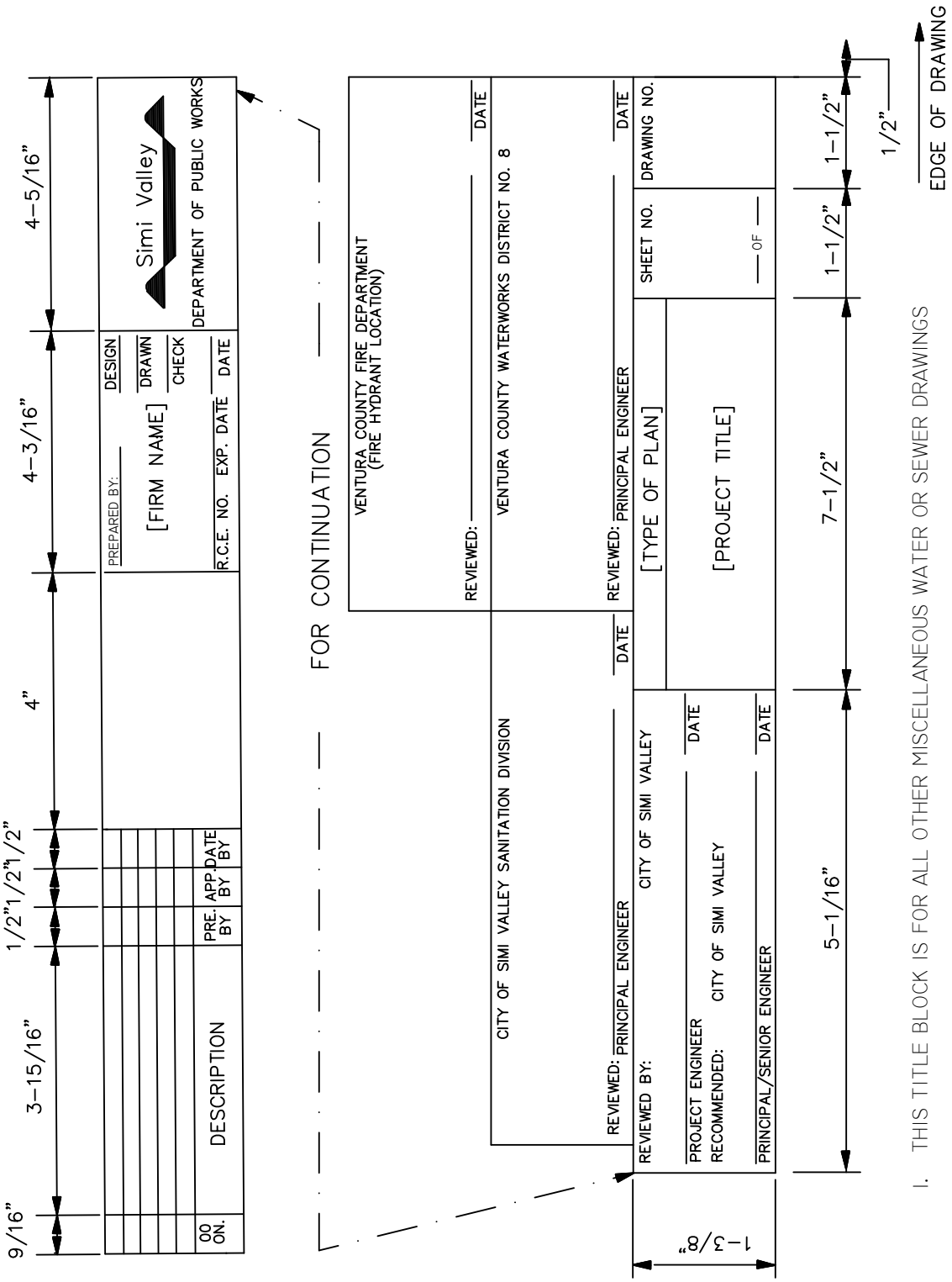


ALL OTHER CASES

1. THIS TITLE BLOCK IS FOR ALL OTHER MISCELLANEOUS WATER OR SEWER DRAWINGS
2. TITLE BLOCK SHALL CONTAIN THE TRACT OR OTHER PROJECT IDENTIFYING NUMBER AS WELL AS "WATER" AND THE TERM "COVER SHEET" OR STREET NAMES(S) AS APPLICABLE.
3. DEPUTY DIRECTOR MAY SIGN FOR THE DIRECTOR ON ANY PLANS.
4. REVISIONS (OR CHANGE ORDERS) MUST BE SIGNED BY THE DISTRICT ENGINEER OR ENGINEER DESIGNATED BY THE DISTRICT ENGINEER.

| | | |
|---|---|---|
| City of Simi Valley<br>DEPARTMENT OF PUBLIC WORKS | VENTURA COUNTY WATERWORKS DISTRICT NO. 8 | PLATE |
| | STANDARD TITLE &<br>REVISION BLOCKS | 1<br>3 OF 3 |
| DISTRICT ENGINEERING | RECOMMENDED: /S/<br>DEPUTY DIR./DISTRICT ENGR. | APPROVED: /S/<br>DIRECTOR OF PUBLIC WORKS |
| | | JAN 00 |

| | |
|---|---|
| — — 8"W — — | EXISTING WATER |
| 8" WATER | PROPOSED WATER |
| — — — | VALVE |
| | FIRE HYDRANT |
| PRV | PRESSURE REGULATING VALVE |
| — — — — | REDUCER |
| — — G — — | GAS LINE |
| — — T — — | TELEPHONE LINE |
| WM — — — — | WATER METER |
| — — E — — | ELECTRIC LINE |
| A/V — — — — | AIR AND VACUUM VALVE |
| B.O. — — — — | BLOW-OFF |
| — — | END CAP |
| — — | PLUG |
| | THRUST BLOCK |
| — — S — — | SEWER |

| | | | |
|---|---|---|---|
| City of Simi Valley | VENTURA COUNTY WATERWORKS DISTRICT NO. 8 | | PLATE |
| DEPARTMENT OF PUBLIC WORKS | STANDARD SYMBOLS | | 2 |
| | RECOMMENDED: /S/ | APPROVED: /S/ | JUNE 99 |
| DISTRICT ENGINEERING | DEPUTY DIR./DISTRICT ENGR. | DIRECTOR OF PUBLIC WORKS | |

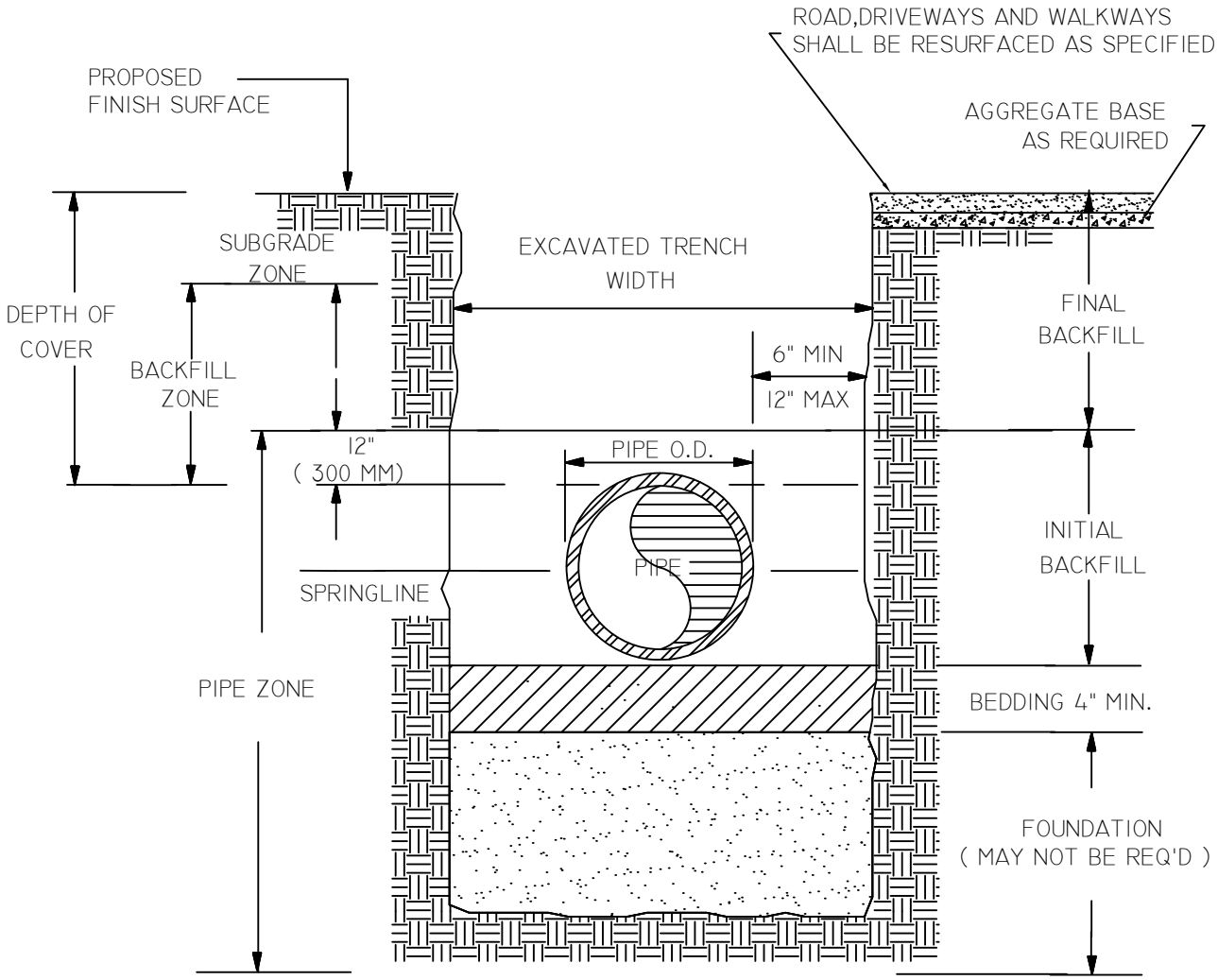


NOTES:

1. STANDARD DEPTH OF COVER IS 42- INCHES MINIMUM TO TOP OF PIPE.
2. EXCAVATED TRENCHES SHALL BE OF MINIMUM WIDTH FOR PROPER PIPE LAYING.

| | | |
|---|---|---|
| City of Simi Valley<br>DEPARTMENT OF PUBLIC WORKS | VENTURA COUNTY WATERWORKS DISTRICT NO. 8 | PLATE |
| | TRENCH TERMINOLOGY AND STANDARD DIMENSIONS | 3 |
| DISTRICT ENGINEERING | RECOMMENDED: /S/<br>DEPUTY DIR./DISTRICT ENGR. | APPROVED: /S/<br>DIRECTOR OF PUBLIC WORKS | JUNE 99 |

# DEPARTMENT OF HEALTH SERVICES, STATE OF CALIFORNIA CRITERIA FOR THE SEPARATION OF WATER MAINS AND SANITARY SEWERS

CONSTRUCTION CRITERIA FOR WASTEWATER LINES OR WATER MAINS WHERE

THE "BASIC SEPARATION STANDARDS" AS DISCUSSED IN DESIGN CRITERIA;

SECTION 2.4C, CANNOT BE ATTAINED ARE SHOWN ON PLATES 4, SHEET 3 OF 6.

TWO CASES ARE COVERED BY THIS PLATE.

CASE 1- NEW WASTEWATER LINE INSTALLED WITH NEW OR EXISTING WATER MAIN.

CASE 2- NEW WATER MAIN INSTALLATION WITH EXISTING WASTEWATER LINE.

## CONSTRUCTION CRITERIA

CASE 1: NEW WASTEWATER LINE BEING INSTALLED; SEE CITY OF SIMI VALLEY SEWERAGE DESIGN & CONSTRUCTION STANDARDS, STANDARD PLAN #6.

CASE 2: NEW WATER MAINS BEING INSTALLED

| ZONE | SPECIAL CONSTRUCTION REQUIREMENTS |
|---|---|
| A | NO WATER MAINS PARALLEL TO WASTEWATER LINES SHALL BE CONSTRUCTED WITHOUT APPROVAL FROM THE RESPONSIBLE HEALTH AGENCY. |
| B | IF THE WASTEWATER LINE PARALLELING THE WATER MAIN DOES NOT MEET THE CASE 1, ZONE B REQUIREMENTS, THE WATER-MAIN SHALL BE CONSTRUCTED OF:<br>1. DUCTILE IRON PIPE WITH HOT BITUMINOUS COATING.<br>2. DIPPED AND WRAPPED ONE-FOURTH-INCH-THICK WELDED STEEL. PIPE.<br>3. CLASS 200 PRESSURE RATED PLASTIC WATER PIPE [DR14 PER AWWA C900] OR EQUIVALENT.<br>4. REINFORCED CONCRETE PRESSURE PIPE, STEEL CYLINDER TYPE, PER AWWA C300-74, OR C301-79, OR C303-70. |

## CONSTRUCTION CRITERIA CONT.

C

IF THE WASTEWATER LINE CROSSING THE WATER MAIN DOES NOT MEET THE CASE 1, ZONE C REQUIREMENTS, THE MAIN SHALL HAVE NO JOINTS IN ZONE C AND SHALL BE CONSTRUCTED OF:

1. DUCTILE IRON PIPE WITH HOT DIP BITUMINOUS COATING.
2. DIPPED AND WRAPPED ONE-FOURTH-INCH-THICK WELDED STEEL PIPE.
3. CLASS 200 PRESSURE RATED PLASTIC WATER PIPE [DR14 PER AWWA C900] OR EQUIVALENT.
4. REINFORCED CONCRETE PRESSURE PIPE, STEEL CYLINDER PIPE, PER AWWA C300-74, OR C301-79, OR C303-70.

D

IF THE WASTEWATER LINE CROSSING THE WATER MAIN DOES NOT MEET THE REQUIREMENTS FOR ZONE D, CASE 1, THE WATER MAIN SHALL HAVE NO JOINTS WITHIN FOUR FEET FROM EITHER SIDE OF THE WASTEWATER LINE AND SHALL BE CONSTRUCTED OF:

1. DUCTILE IRON PIPE HOT DIP BITUMINOUS COATING.
2. DIPPED AND WRAPPED ONE-FOURTH-INCH-THICK WELDED STEEL PIPE.
3. CLASS 200 PRESSURE RATED PLASTIC WATER PIPE [DR14 AWWA C900] OR EQUIVALENT.
4. REINFORCED CONCRETE PRESSURE PIPE, STEEL CYLINDER TYPE, PER AWWA C300-74, OR C301-79, OR C303-70.

## DEFINITIONS:

1. HEALTH AGENCY- THE DEPARTMENT OF HEALTH SERVICES, STATE OF CALIFORNIA.

2. LOW HEAD WATER MAIN- ANY WATER MAIN WHICH HAS A PRESSURE OF FIVE PSI OR LESS AT ANY TIME AT ANY POINT IN THE MAIN.

3. COMPRESSION JOINT- A PUSH-ON JOINT THAT SEALS BY MEANS OF THE COMPRESSION OF RUBBER RING OR GASKET BETWEEN THE PIPE AND A BELL OR COUPLING.

4. MECHANICAL JOINTS- BOLTED JOINTS.

5. RATED WORKING PRESSURE OR PRESSURE CLASS- A PIPE CLASSIFICATION SYSTEM BASED UPON THE INTERNAL WORKING PRESSURE OF THE FLUID IN THE PIPE, TYPE OF PIPE MATERIAL, AND THE THICKNESS OF THE PIPE WALL.

6. FUSED JOINT- THE JOINING OF SECTIONS OF PIPE USING THERMAL OR CHEMICAL BONDING PROCESS.

7. SLEEVE- A PROTECTIVE TUBE OF STEEL WITH A WALL THICKNESS OF NOT LESS THAN ONE-FOURTH INCH INTO WHICH A PIPE IS INSERTED.

8. GROUNDWATER- SUBSURFACE WATER FOUND IN THE SATURATION ZONE.

9. HOUSE LATERAL- A WASTEWATER LINE CONNECTING THE BUILDING DRAIN AND THE MAIN WASTEWATER LINE.

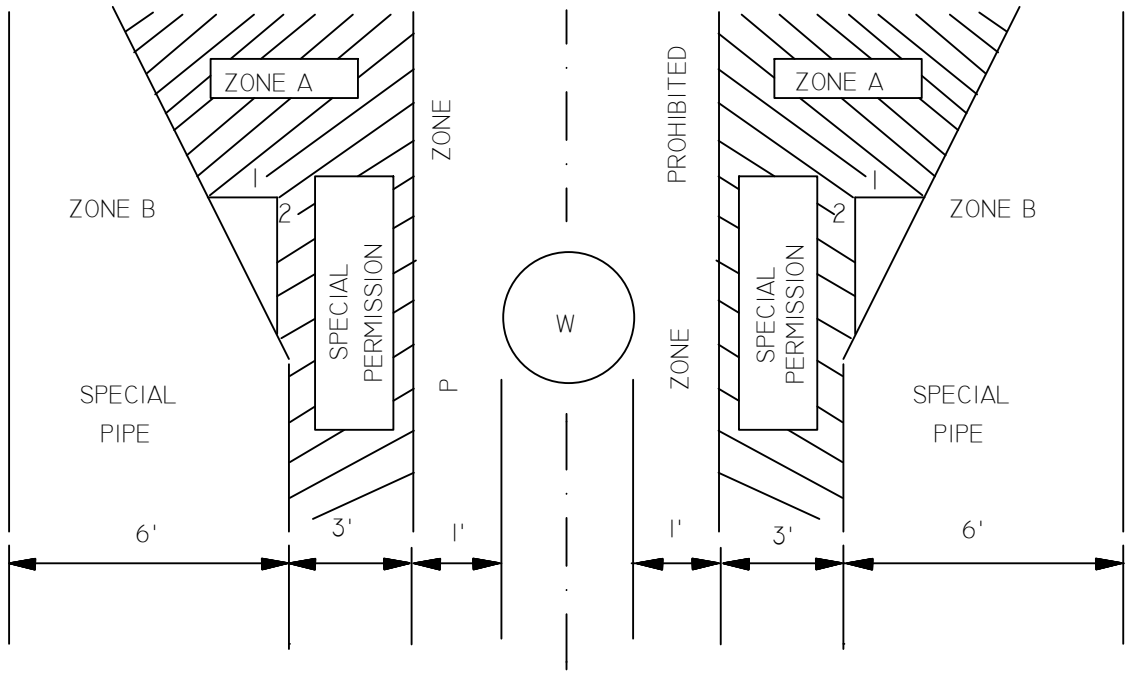


CASE 1 NEW WASTEWATER [SEWER] MAIN

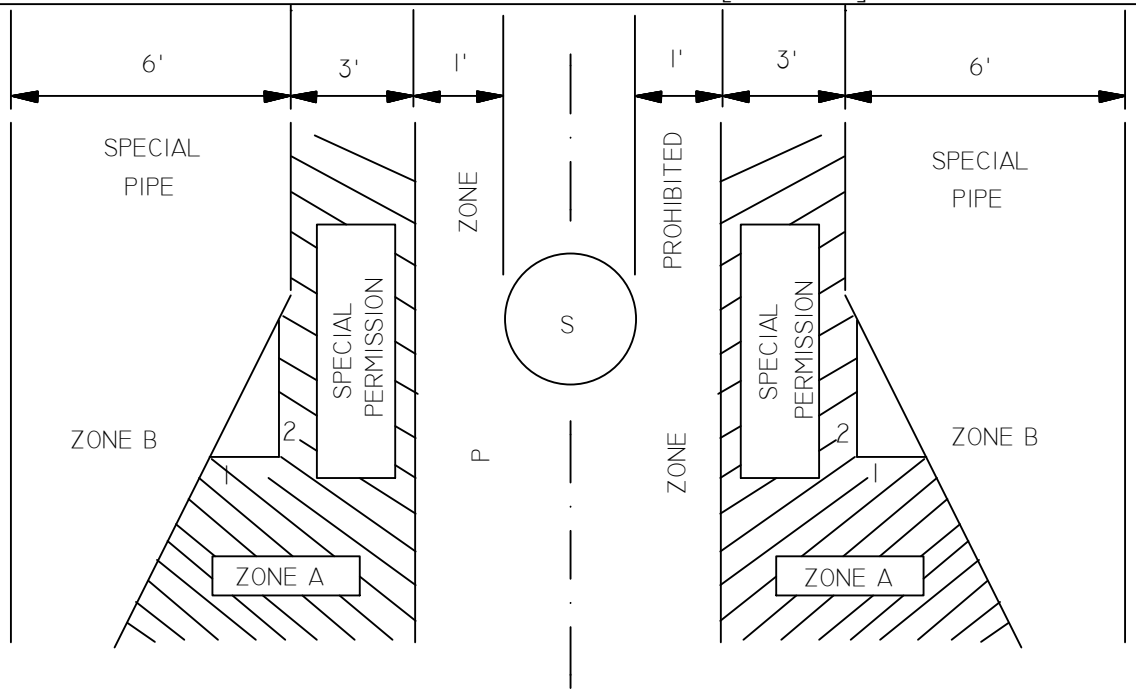


CASE 2 NEW WATER MAIN

| | | |
|---|---|---|
| City of Simi Valley<br>DEPARTMENT OF PUBLIC WORKS | VENTURA COUNTY WATERWORKS DISTRICT NO. 8 | PLATE |
| | SEPARATION REQUIREMENTS FOR WATER & WASTEWATER LINES | 4<br>4 OF 5 |
| DISTRICT ENGINEERING | RECOMMENDED: /S/<br>DEPUTY DIR./DISTRICT ENGR. | APPROVED: /S/<br>DIRECTOR OF PUBLIC WORKS | JUNE 99 |

# CONSTRUCTION AT CROSSINGS

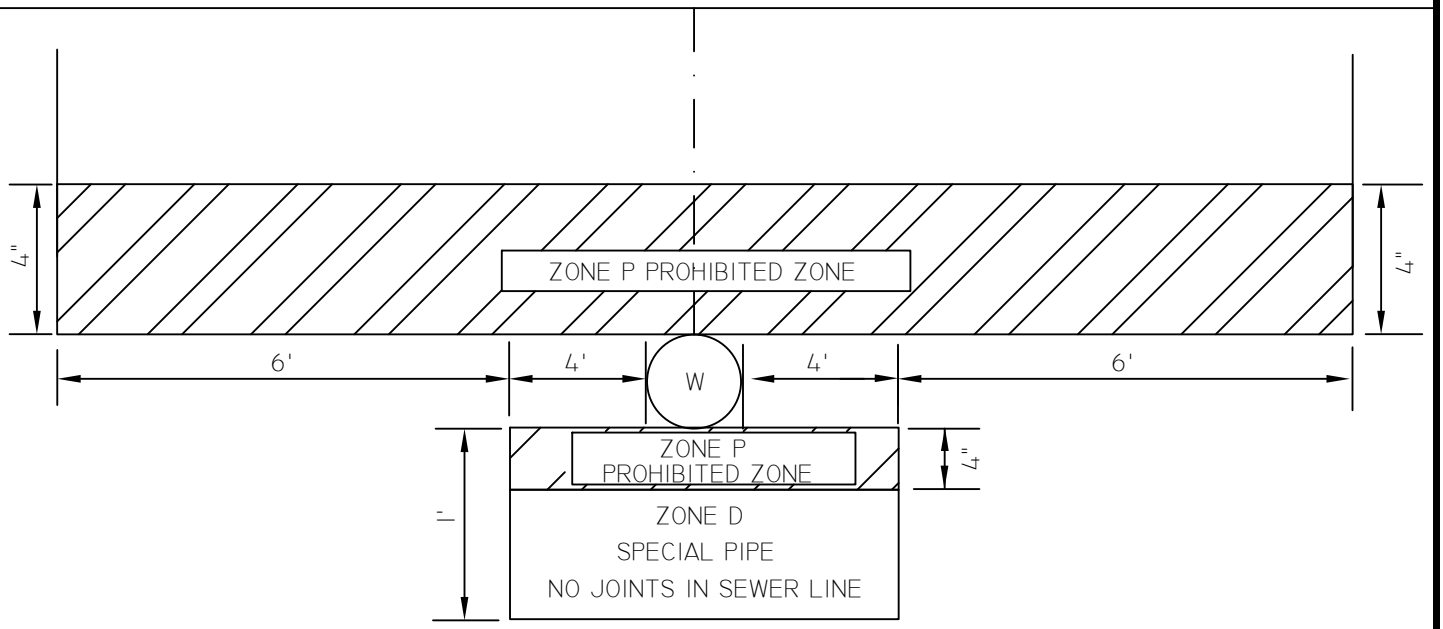


CASE 1 NEW WASTEWATER [SEWER] MAIN

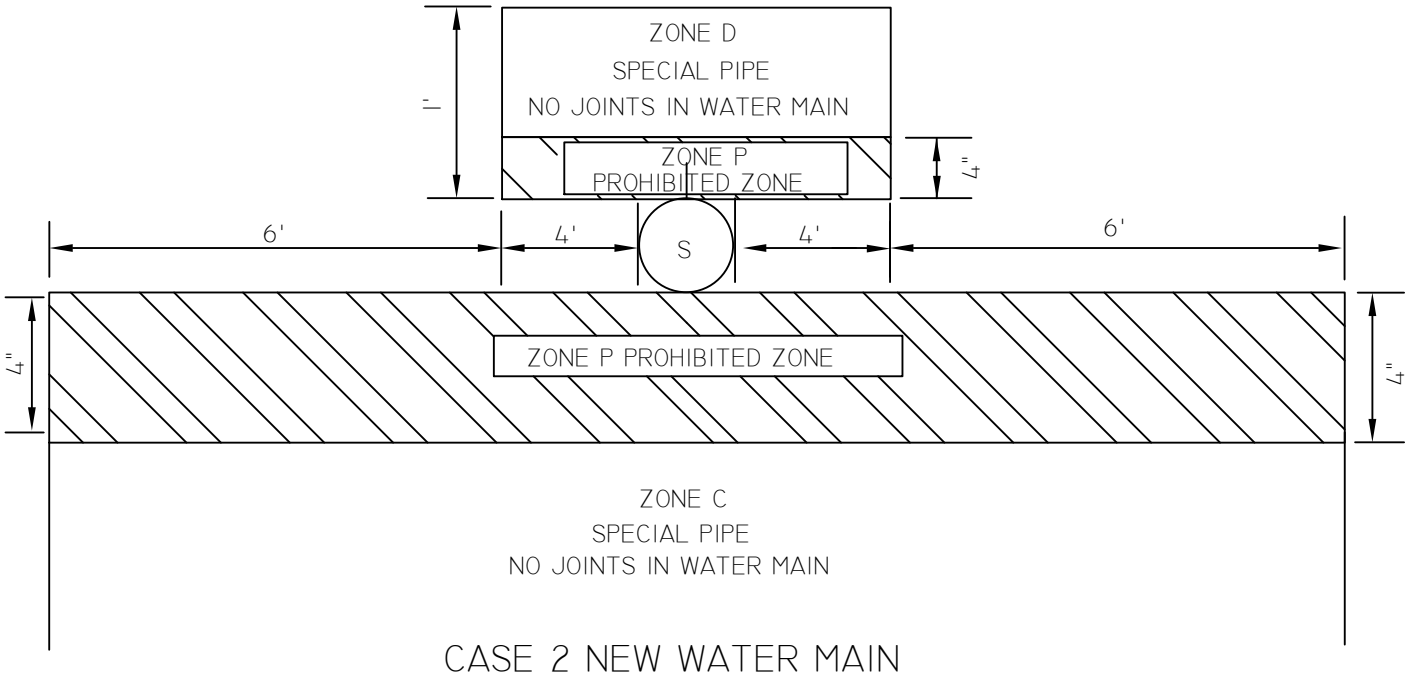


CASE 2 NEW WATER MAIN

| | | |
|---|---|---|
| City of Simi Valley<br>DEPARTMENT OF PUBLIC WORKS | VENTURA COUNTY WATERWORKS DISTRICT NO. 8 | PLATE |
| | SEPARATION REQUIREMENTS FOR WATER & WASTEWATER LINES | 4<br>5 OF 5 |
| DISTRICT ENGINEERING | RECOMMENDED: /S/<br>DEPUTY DIR./DISTRICT ENGR. | APPROVED: /S/<br>DIRECTOR OF PUBLIC WORKS | JUNE 99 |

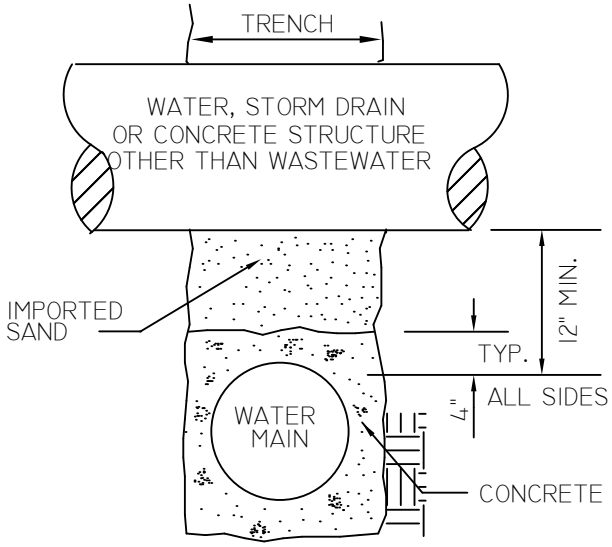


ENCASEMENTS
NEAR OBSTRUCTIONS

[SEE NOTE 3]

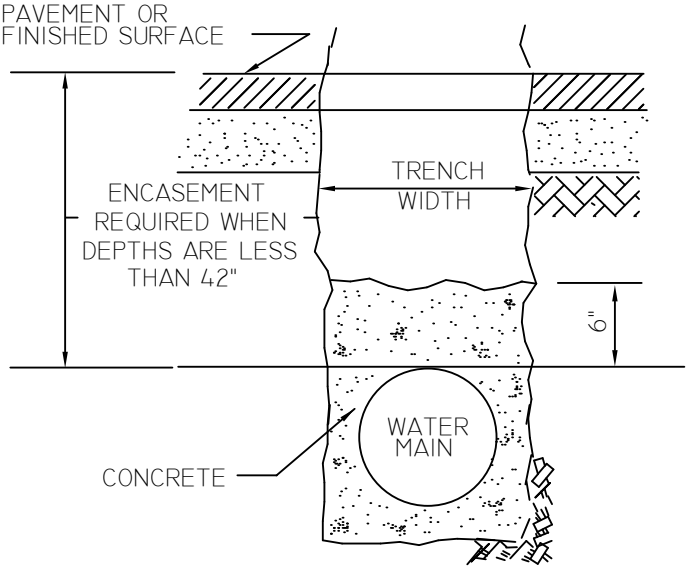


ENCASEMENTS FOR COVER
LESS THAN MINIMUM

[SEE NOTE 4]

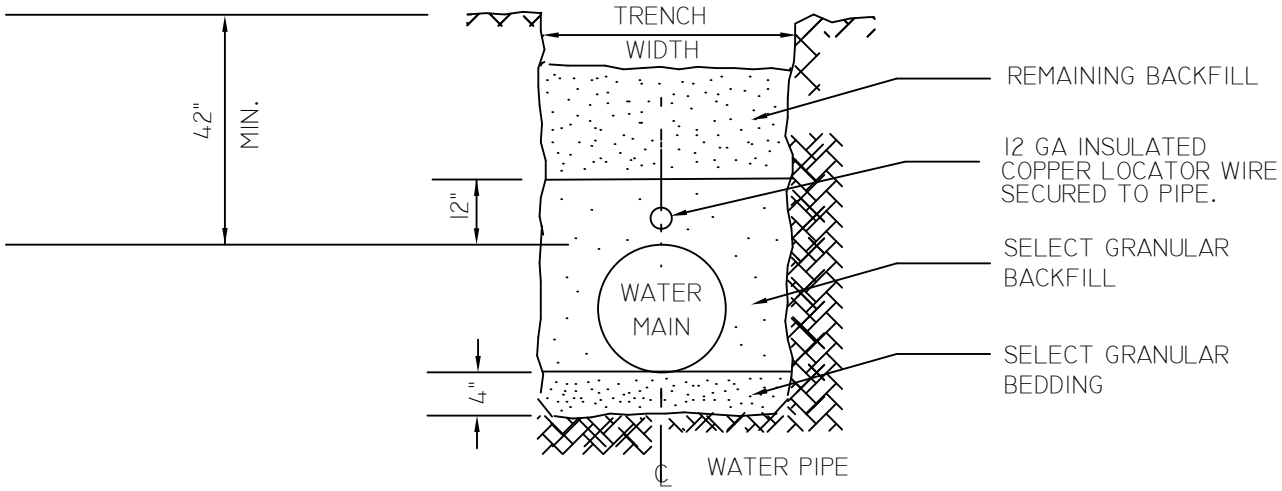


TYPICAL TRENCH SECTION

NOTE:

1. SEE PLATE 4 FOR WASTEWATER LINE CROSSING REQUIREMENTS.
2. CONCRETE STRENGTH SHALL BE 3000 PSI. (MINIMUM)
3. ENCASEMENT SHALL EXTEND BEYOND THE EDGE OF THE OBSTRUCTION IN BOTH DIRECTIONS AN EQUAL DISTANCE FROM THE WATER MAIN TO THE OBSTRUCTION.
4. ENCASEMENT ALONG THE WATER MAIN SHALL EXTEND UNTIL DEPTH OF PIPELINE COVER REACHES 42".
5. PIPE BEING ENCASED SHALL BE DONE IN ACCORDANCE WITH SPECIFICATION SECTION 3.16C.

| | | |
|---|---|---|
| City of Simi Valley<br>DEPARTMENT OF PUBLIC WORKS | VENTURA COUNTY WATERWORKS DISTRICT NO. 8 | PLATE<br>5 |
| | PIPELINE ENCASEMENTS | |
| DISTRICT ENGINEERING | RECOMMENDED: /S/<br>DEPUTY DIR./DISTRICT ENGR. | APPROVED: /S/<br>DIRECTOR OF PUBLIC WORKS |
| | | JUNE 99 |

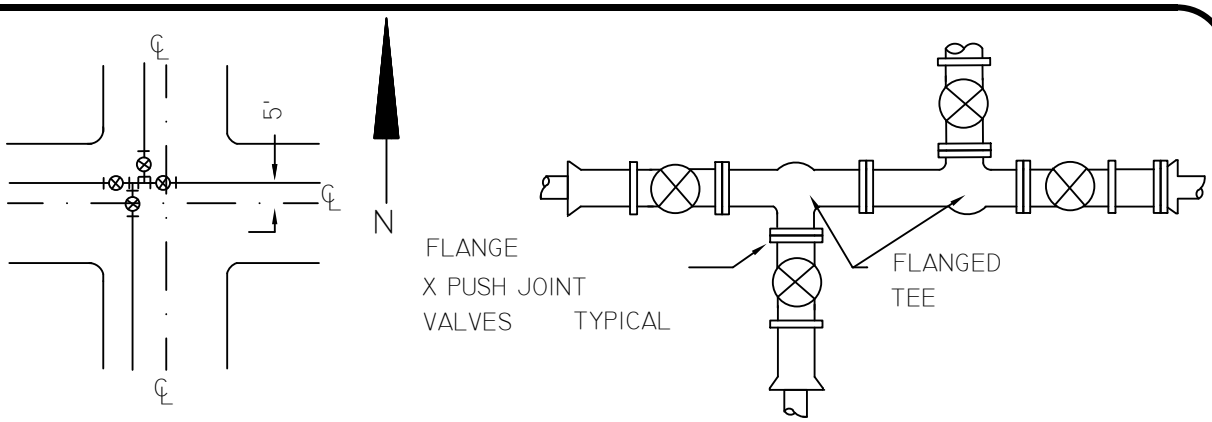


DOUBLE TEE-TYPICAL CONNECTIONS

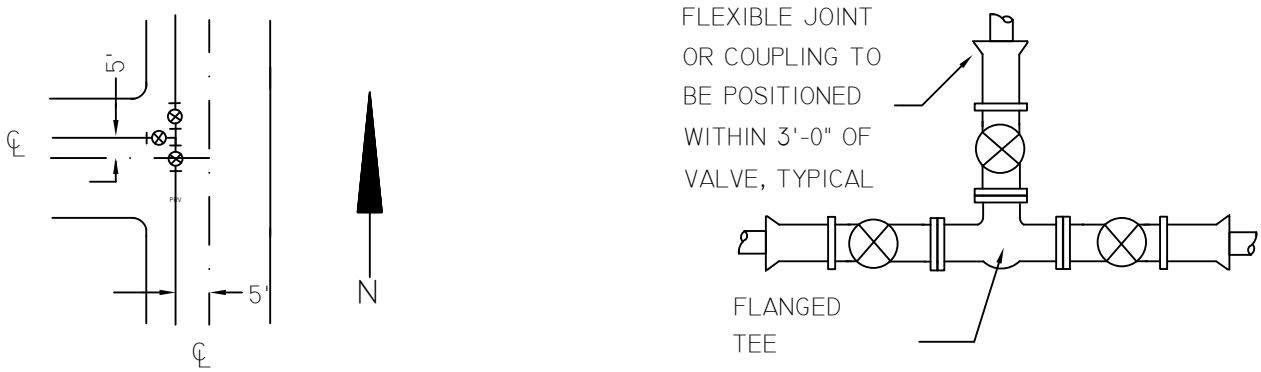


TEE-TYPICAL CONNECTIONS

NOTES:

1. VALVES SHALL BE LOCATED ON EACH BRANCH OF WATER MAIN INTERSEC - TIONS. WHERE RELATIVELY SHORT LINES LESS THAN 500 FEET IN LENGTH ARE INVOLVED, ONE OF THE TWO VALVES BETWEEN INTERSECTIONS MAY BE OMITTED.

2. WATER MAINS IN PUBLIC STREETS SHALL BE LOCATED PARALLEL TO AND 5-FEET NORTH OR WEST OF STREET CENTERLINES WHENEVER POSSIBLE.

3. SEE PLATE NO. 15 FOR ANCHOR BLOCKS AND PLATE NO. 16 FOR THRUST BLOCK DETAILS.

4. SEE PLATE NO. 7 FOR VALVE BOX DETAILS.

5. REFER TO SECTIONS 3.4 "MAIN LINE FITTINGS" AND SECTION 7.11 "INSTAL- LATION" OF VALVES AND FITTINGS" FOR INFORMATION CONCERNING THE INSTALLATION AND WRAPPING OF BOLTED CONNECTIONS.

| | | | |
|---|---|---|---|
| City of Simi Valley | VENTURA COUNTY WATERWORKS DISTRICT NO. 8 | | PLATE |
| DEPARTMENT OF PUBLIC WORKS | WATERMAIN CONNECTIONS AT INTERSECTONS | | 6 |
| DISTRICT ENGINEERING | RECOMMENDED: /S/ | APPROVED: /S/ | JUNE 99 |
| | DEPUTY DIR./DISTRICT ENGR. | DIRECTOR OF PUBLIC WORKS | |

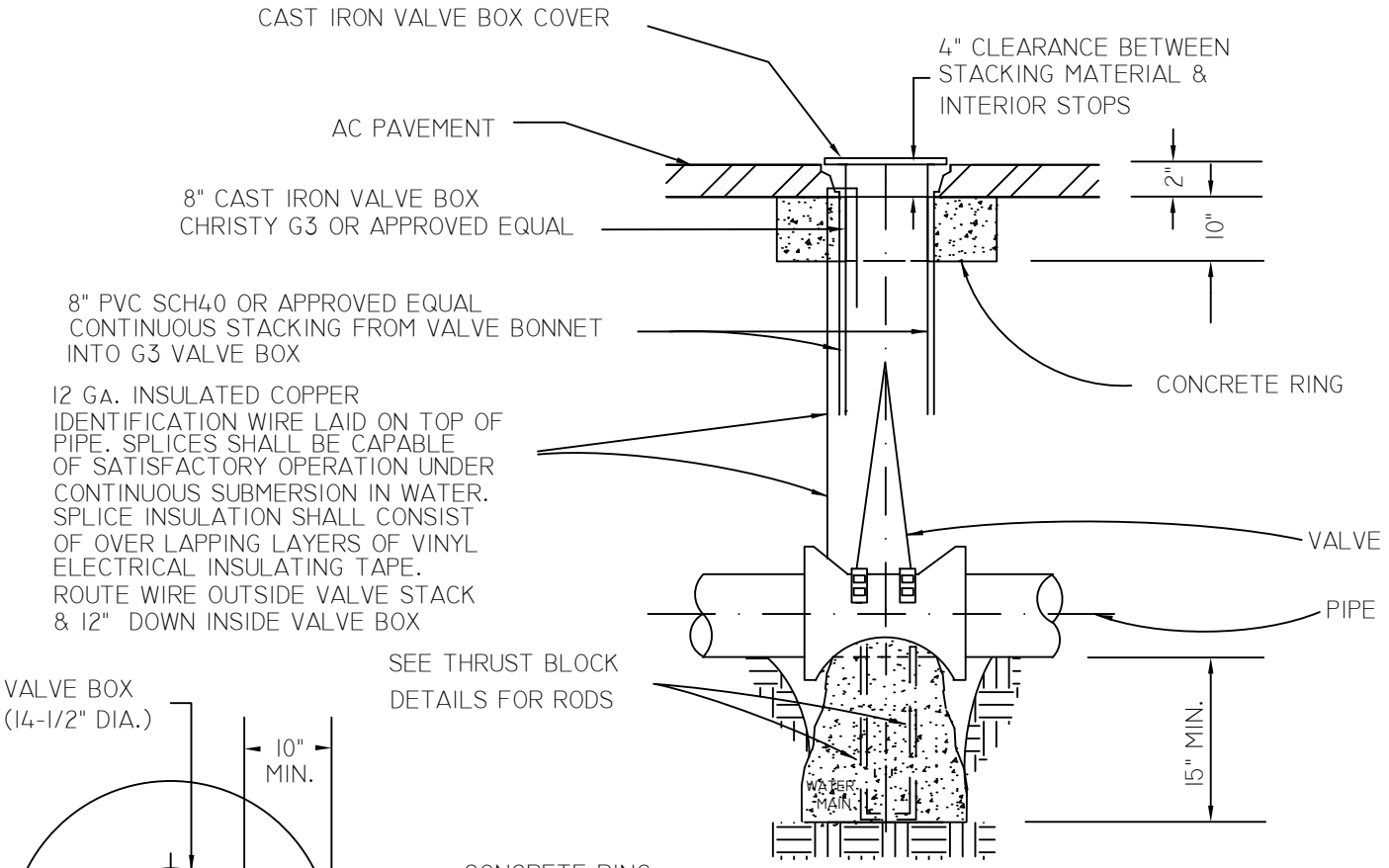


ELEVATION

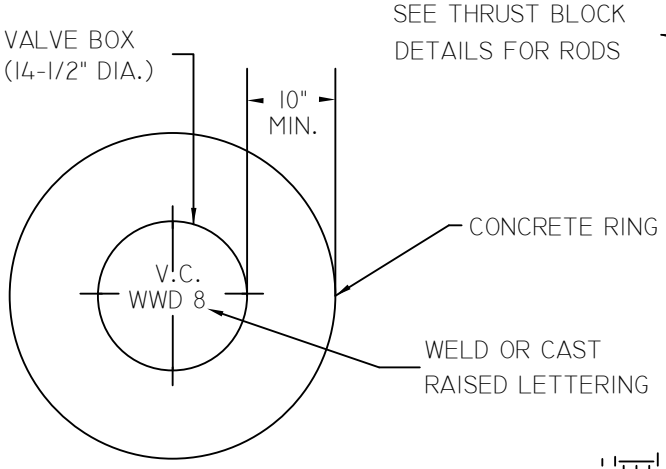


TYPICAL IDENTIFICATION

N.T.S.

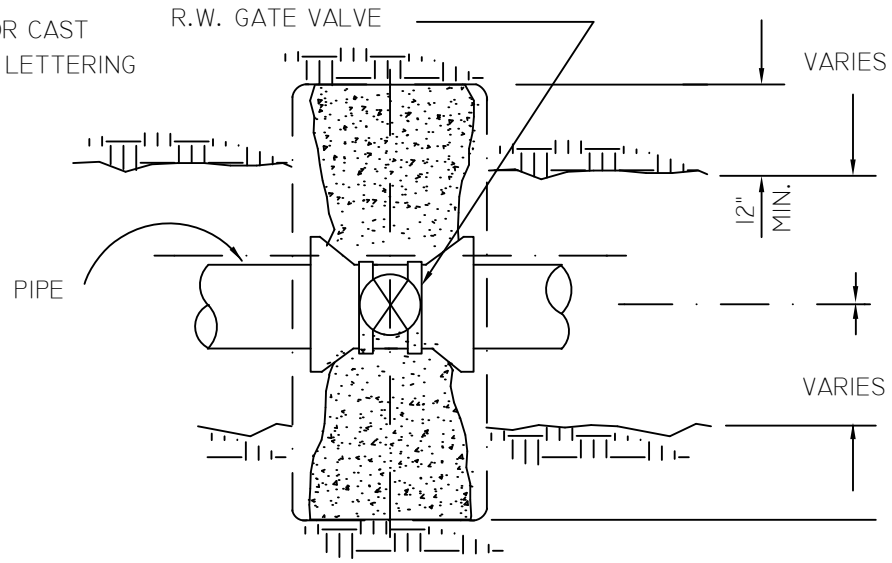


PLAN

| | | |
|---|---|---|
| City of Simi Valley<br>DEPARTMENT OF PUBLIC WORKS<br>DISTRICT ENGINEERING | VENTURA COUNTY WATERWORKS DISTRICT NO. 8<br>VALVE ASSEMBLY DETAILS | PLATE<br>7 |
| | RECOMMENDED: /S/<br>DEPUTY DIR./DISTRICT ENGR. | APPROVED: /S/<br>DIRECTOR OF PUBLIC WORKS | JUNE 09 |

# LOCATION OF ABOVE-GROUND UTILITIES WHERE SIDEWALKS ARE ADJACENT TO THE CURB

WHEN SIDEWALKS ARE CONSTRUCTED ADJACENT TO THE CURB, ABOVE GROUND UTILITIES INCLUDING BUT NOT LIMITED TO AIR AND VACUUM VALVES, FIRE HYDRANTS BLOW-OFFS, METER BOXES, ETC. SHALL BE LOCATED AS FOLLOWS. PLACEMENT OF ABOVE GROUND UTILITIES SHALL NOT CONFLICT WITH CURRENT A.D.A. REQUIREMENTS.

EXAMPLE-FIRE HYDRANT

[A] WHEN 5FT. SIDEWALKS ARE ADJACENT TO CURB HYDRANTS SHALL BE 6FT. FROM FACE OF CURB.

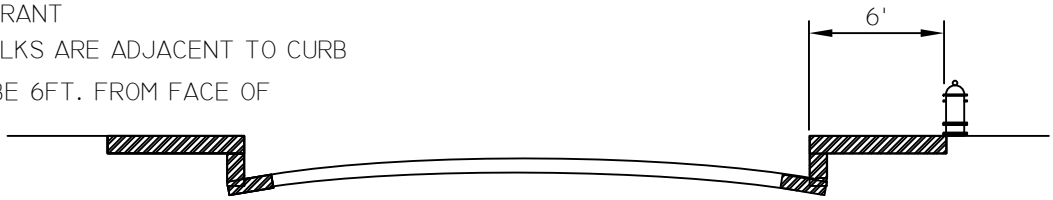


[B] WHEN SIDEWALKS ARE CONSTRUCTED WITH WIDTHS GREATER THAN 6FT. FROM CURB FACE TO OUTSIDE EDGE OF SIDEWALK [I.E., AROUND SCHOOLS, PARKS, COMMERICAL OR INDUSTRIAL AREAS], HYDRANTS SHALL BE PLACED IN THE NORMAL LOCATION 24" FROM THE CURB FACE.

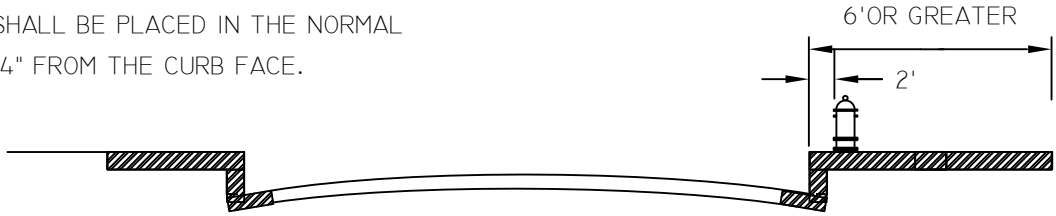


[C] WHEN SIDEWALKS ARE CONSTRUCTED BACK FROM CURB, HYDRANT SHALL BE PLACED IN THE NORMAL LOCATION 24" FROM CURB FACE.

[D] WHEN INVERTED SHOULDER SECTION IS PERMITTED AND CURB, GUTTER AND SIDEWALKS ARE WAIVED, THE HYDRANTS SHALL BE 24" BEHIND THE EDGE OF THE PAVEMENT.

| | | | |
|---|---|---|---|
| City of Simi Valley<br>DEPARTMENT OF PUBLIC WORKS | VENTURA COUNTY WATERWORKS DISTRICT NO. 8 | | PLATE |
| | LOCATION OF HYDRANTS & METERS | | 8<br>1 OF 2 |
| DISTRICT ENGINEERING | RECOMMENDED:<br>/S/<br>DEPUTY DIR./DISTRICT ENGR. | APPROVED:<br>/S/<br>DIRECTOR OF PUBLIC WORKS | JUNE 99 |

RESIDENTIAL SINGLE WATER SERVICES ARE TO BE LOCATED ON THE PROPERTY LINE DIRECTLY BEHIND THE CURB. LOCATION OF THE SERVICE IS TO BE PERMANENTLY MARKED ON TOP OF THE CURB WITH A "W". WHERE THIS IS NOT POSSIBLE, ALTERNATE LOCATIONS, AS SHOWN BELOW, SHALL BE USED SUBJECT TO ACCEPTANCE BY THE INSPECTOR. UNDER NO CIRCUMSTANCE SHALL THE METER BE PLACED IN A DRIVEWAY. IN ALL CASES THERE SHALL BE A MINIMUM SEPARATION OF 10 FEET BETWEEN WATER SERVICES AND SEWER LATERALS AND THERE SHALL BE A MINIMUM SEPARATION OF 5 FEET BETWEEN THE CENTER OF THE STREET TREE AND THE NEAREST EDGE OF THE METER BOX.

SINGLE WATER METER SERVICE

LOCATION

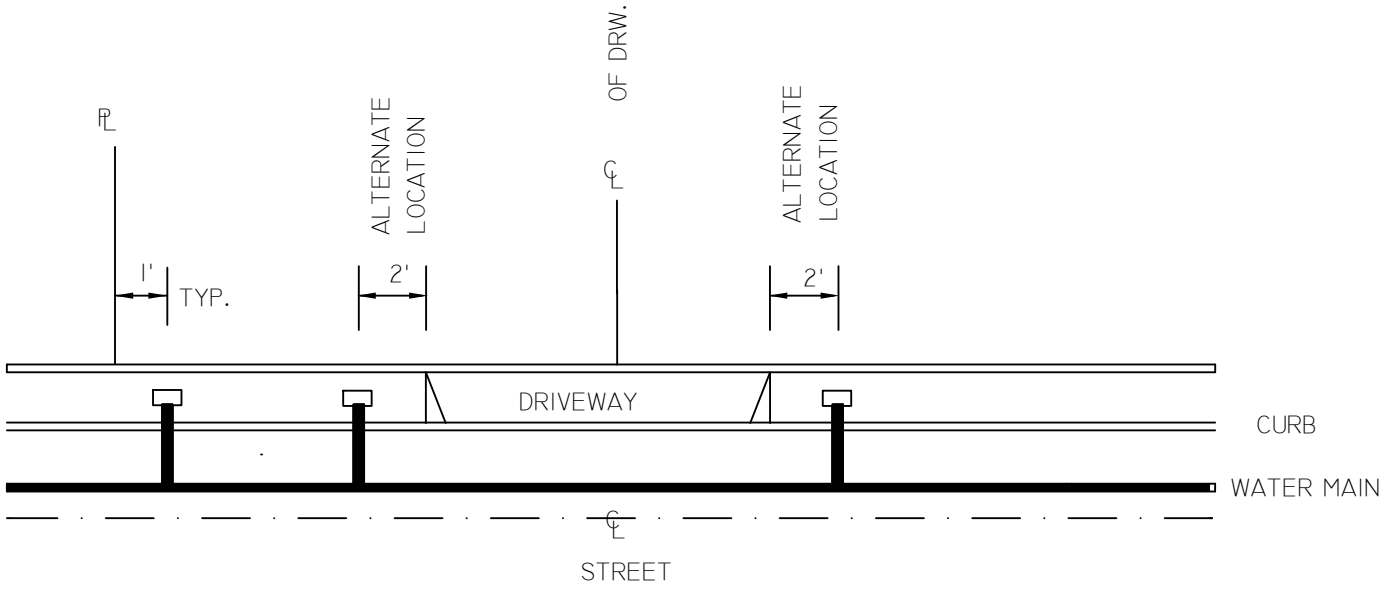


| | | |
|---|---|---|
| City of Simi Valley<br>DEPARTMENT OF PUBLIC WORKS<br>DISTRICT ENGINEERING | VENTURA COUNTY WATERWORKS DISTRICT NO. 8<br>LOCATION OF HYDRANTS & METERS (SINGLE SERVICE) | PLATE<br>8<br>2 OF 3 |
| | RECOMMENDED: /S/<br>ASST. DIRECTOR OF PUBLIC WORKS/DIST. ENGR. | APPROVED: /S/<br>DIRECTOR OF PUBLIC WORKS |
| | | MAR 05 |

RESIDENTIAL DUAL AND SIDE BY SIDE WATER SERVICES ARE TO BE LOCATED NEAR THE PROPERTY LINE AS SHOWN DIRECTLY BEHIND THE CURB. LOCATION OF THE SERVICE IS TO BE PERMANENTLY MARKED ON TOP OF THE CURB WITH A "W". WHERE THIS IS NOT POSSIBLE, ALTERNATE LOCATIONS, AS SHOWN ON PLATE 8, 2 OF 3, SHALL BE USED SUBJECT TO ACCEPTANCE BY THE INSPECTOR. UNDER NO CIRCUMSTANCE SHALL THE METER BE PLACED IN A DRIVEWAY. IN ALL CASES THERE SHALL BE A MINIMUM SEPARATION OF 10 FEET BETWEEN WATER SERVICES AND SEWER LATERALS AND THERE SHALL BE A MINIMUM SEPARATION OF 5 FEET BETWEEN THE CENTER OF THE STREET TREE AND THE NEAREST EDGE OF THE METER BOX.

## DUAL & SIDE BY SIDE WATER METER SERVICE LOCATION

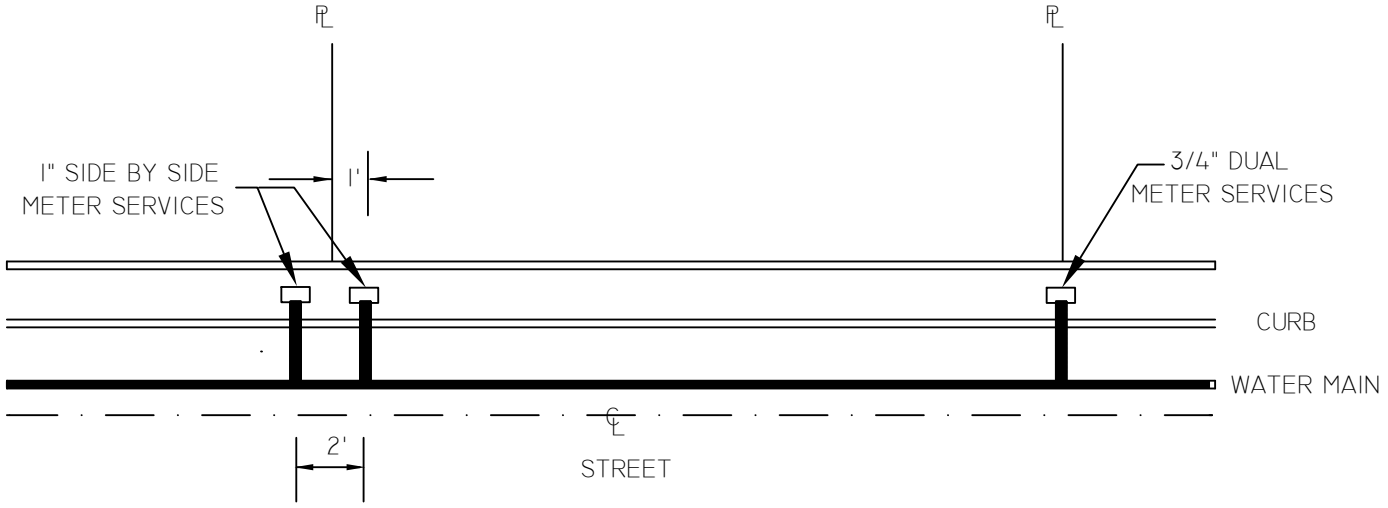


| | | |
|---|---|---|
| City of Simi Valley<br>DEPARTMENT OF PUBLIC WORKS | VENTURA COUNTY WATERWORKS DISTRICT NO. 8 | PLATE |
| | LOCATION OF HYDRANTS & METERS<br>DUAL/SIDE BY SIDE | 8<br>3 OF 3 |
| DISTRICT ENGINEERING | RECOMMENDED: / APPROVED: | MAR 05 |
| | ASST. DIRECTOR OF PUBLIC WORKS/DIST. ENGR. / DIRECTOR OF PUBLIC WORKS | |

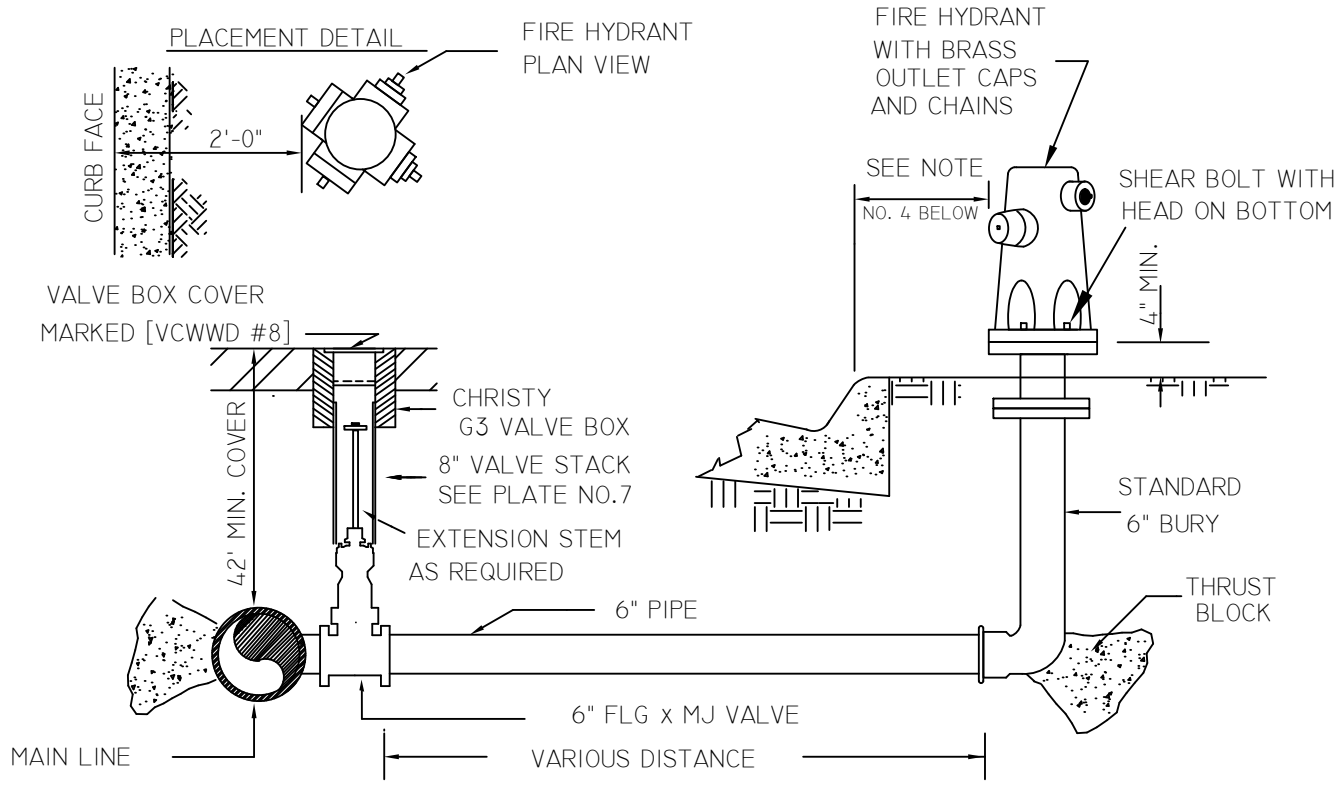


NOTES:

1. FIRE HYDRANTS SHALL BE ALL BRONZE CLOW 2000 SERIES OR JAMES JONES 3700 R SERIES OR EQUAL AND SHALL BE PAINTED IN ACCORDANCE WITH SECTION 3.16. APPROVED COLORS ARE RUSTOLEUM #7448 "SCHOOL BUS YELLOW" OR SYN-LUX 876C (INTERNATIONAL YELLOW)

2. THRUST BLOCK SIZES PER PLATE NO. 17.

3. FIRE HYDRANTS LOCATED IN UNDEVELOPED AREAS, WHERE STREETS ARE WITHOUT CURBS, SHALL BE PROTECTED WITH GUARD POSTS. POSTS SHALL BE 6' LENGTHS OF 4" STD. WT. PIPE FILLED WITH GROUT AND SET, 3' BELOW GRADE IN 18" O.D. CONC. BASE. POSTS TO BE PLACED 2' IN FRONT OF AND 2'-6" EACH SIDE OF FIRE HYDRANT.

4. LOCATE FIRE HYDRANTS PER PLATE NO. 8.

5. FOR FIRE HYDRANTS BEING UTILIZED AS BLOW-OFFS, REFER TO PLATE NO. 12 FOR CONNECTIONS TO MAIN.

6. SEE SECTION 3.8 OR 3.4 "MAIN LINE VALVES" AND SECTION 7.11 "INSTALLATION OF VALVES AND FITTINGS" FOR INSTALLATION AND WRAPPING REQUIREMENTS FOR BOLTED CONNECTION.

| | | | |
|---|---|---|---|
| City of Simi Valley | VENTURA COUNTY WATERWORKS DISTRICT NO. 8 | | PLATE |
| DEPARTMENT OF PUBLIC WORKS | FIRE HYDRANT INSTALLATION | | 9 |
| DISTRICT ENGINEERING | RECOMMENDED: /S/ | APPROVED: /S/ | NOV 02 |
| | DISTRICT ENGR. | DIRECTOR OF PUBLIC WORKS | |

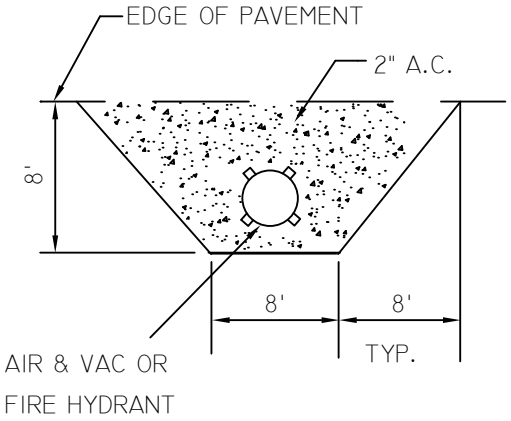


FIRE HYDRANT OR AIR/VAC. VALVE IN STREET SHOULDER

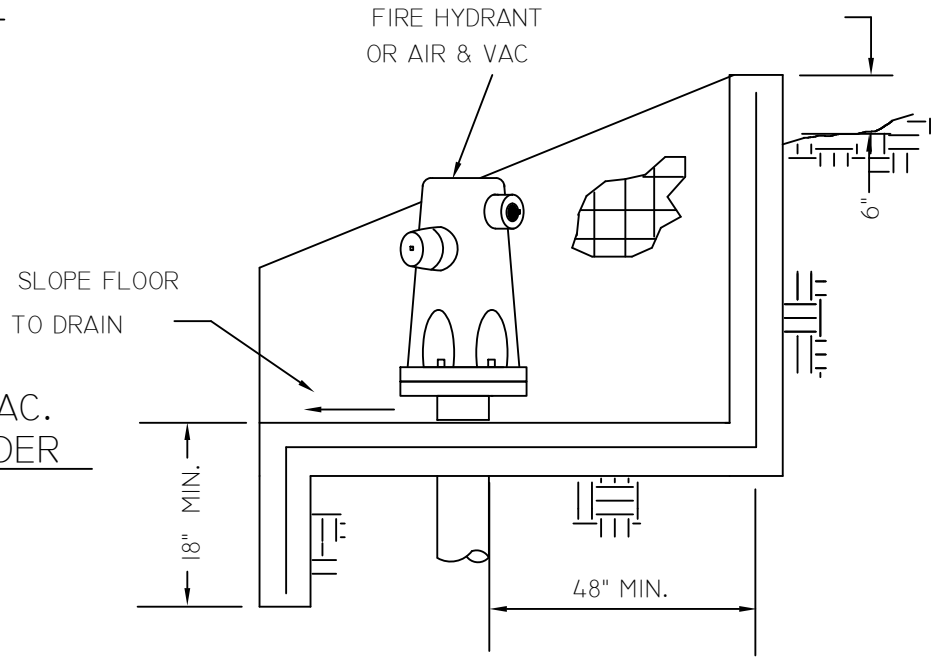


SECTION A-A

CONCRETE [OR BLOCK]

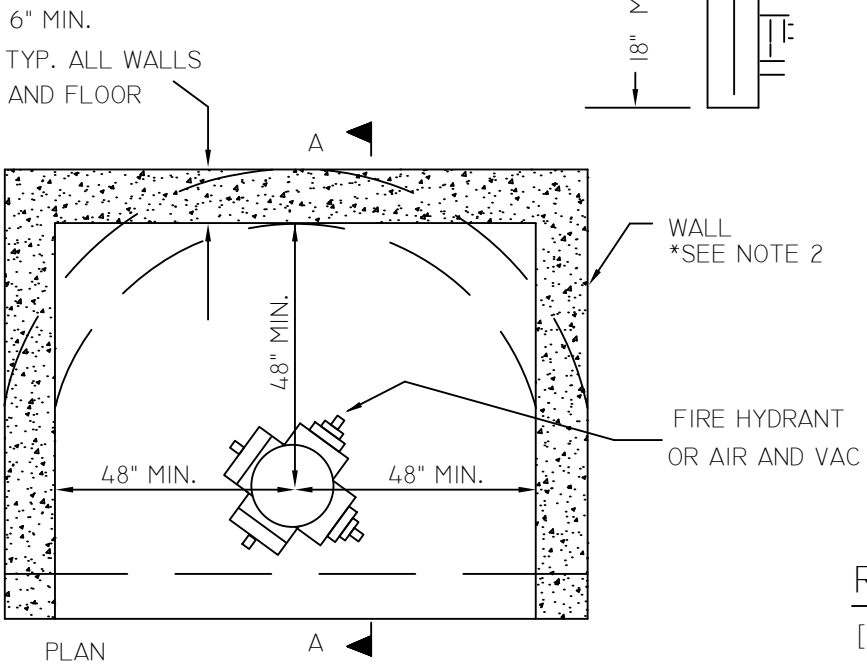


PLAN

RETAINING WALL

[TO BE USED WHERE GROUND SLOPE EXCEEDS 30% OR AS REQUIRED]

NOTES:

1. ALL REBAR #4 @ 12" ON CENTER.
2. CONCRETE BLOCK MAY BE SUBSTITUTED FOR WALL SECTIONS.
3. ALL WALLS EXCEEDING 30" IN HEIGHT REQUIRE BUILDING DEPT. PERMIT.

| | | | |
|---|---|---|---|
| City of Simi Valley | VENTURA COUNTY WATERWORKS DISTRICT NO. 8 | | PLATE |
| DEPARTMENT OF PUBLIC WORKS | MISCELLANEOUS DETAILS<br>FIRE HYDRANTS AND AIR/VAC. VALVES | | 10 |
| DISTRICT ENGINEERING | RECOMMENDED:<br>/S/<br>DEPUTY DIR./DISTRICT ENGR. | APPROVED:<br>/S/<br>DIRECTOR OF PUBLIC WORKS | JUNE 99 |

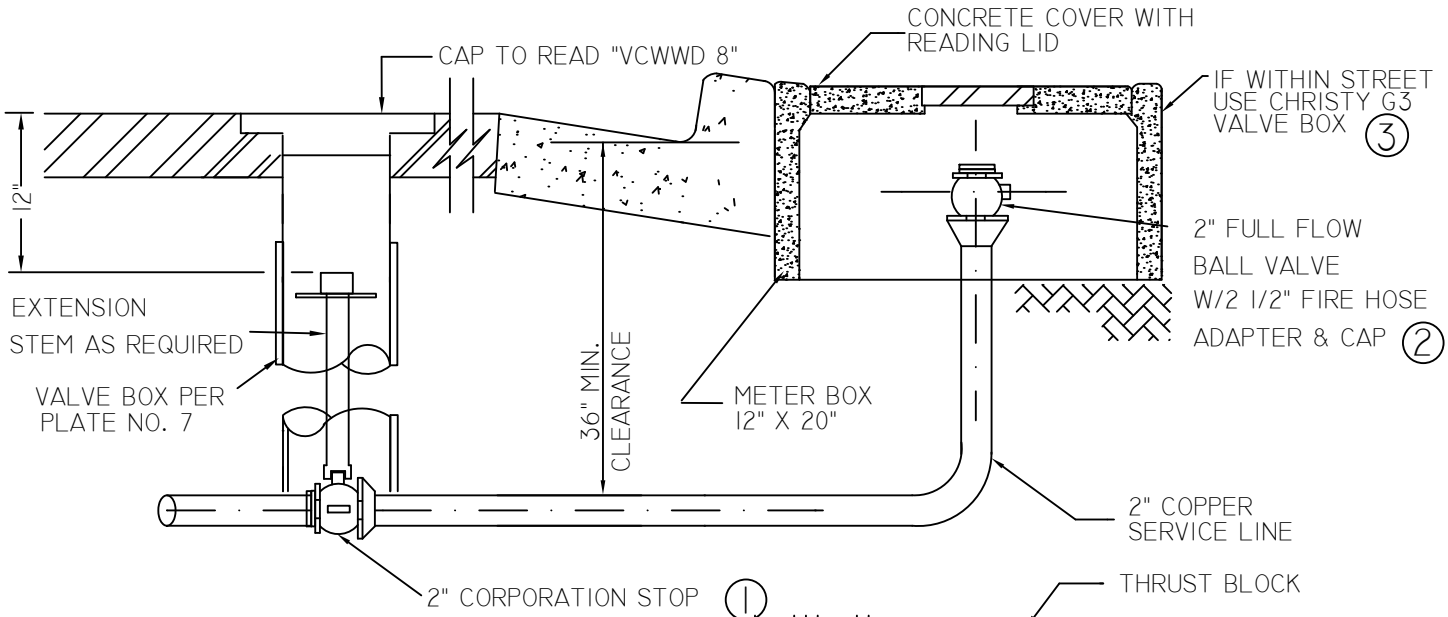


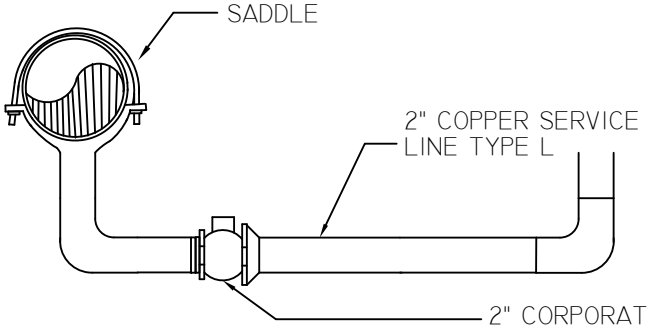


LOW-POINT CONNECTION

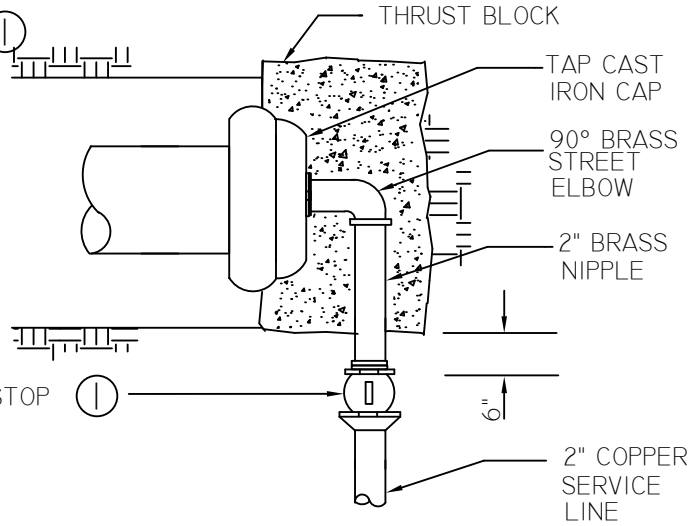


END-OF-MAIN CONNECTION

① 2" CORPORATION STOP REFER TO SECTION 3.10.A.5; FOR MATERIALS.

② 2" BALL VALVE REFER TO SECTION 3.10.A.2; FOR MATERIALS.

③ VALVE BOX/VAULT; REFER TO SECTION 3.10.A.3; FOR MATERIALS.

| | | |
|---|---|---|
| City of Simi Valley<br>DEPARTMENT OF PUBLIC WORKS | VENTURA COUNTY WATERWORKS DISTRICT NO. 8 | PLATE |
| | 2" BLOW-OFF INSTALLATION | 11 |
| DISTRICT ENGINEERING | RECOMMENDED: / APPROVED: | NOV 02 |
| | DISTRICT ENGR. / DIRECTOR OF PUBLIC WORKS | |

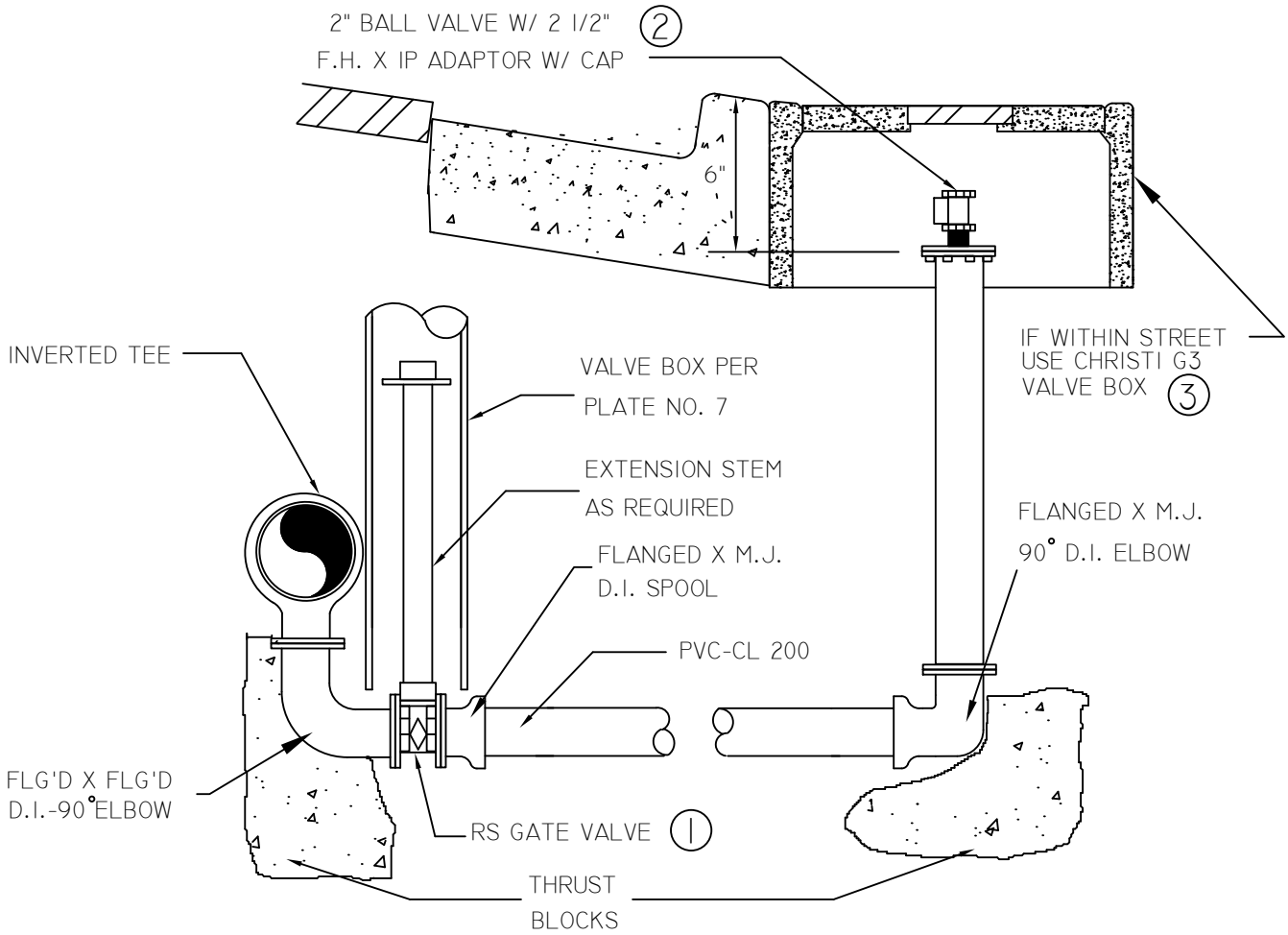


NOTES

1. REFER TO SECTION 3.8 OR 3.4 "MAIN LINE FITTINGS" AND SECTION 7.11 "INSTALLATION OF VALVES AND FITTINGS" FOR INFORMATION CONCERNING THE INSTALLATION AND PROTECTION OF BOLTED CONNECTIONS.

2. SEE PLATE 16 FOR THRUST BLOCK DETAILS

1 REFER TO SECTION 3.8.B FOR MATERIALS.

2 REFER TO SECTION 3.8.D FOR MATERIALS.

3 VALVE BOX/VAULT; REFER TO SECTION 3.10.A.3; FOR MATERIALS.

| | | |
|---|---|---|
| City of Simi Valley<br>DEPARTMENT OF PUBLIC WORKS | VENTURA COUNTY WATERWORKS DISTRICT NO. 8 | PLATE |
| | 4" BLOW-OFF INSTALLATION | 12 |
| DISTRICT ENGINEERING | RECOMMENDED: / APPROVED: | NOV 02 |
| | DISTRICT ENGR. / DIRECTOR OF PUBLIC WORKS | |

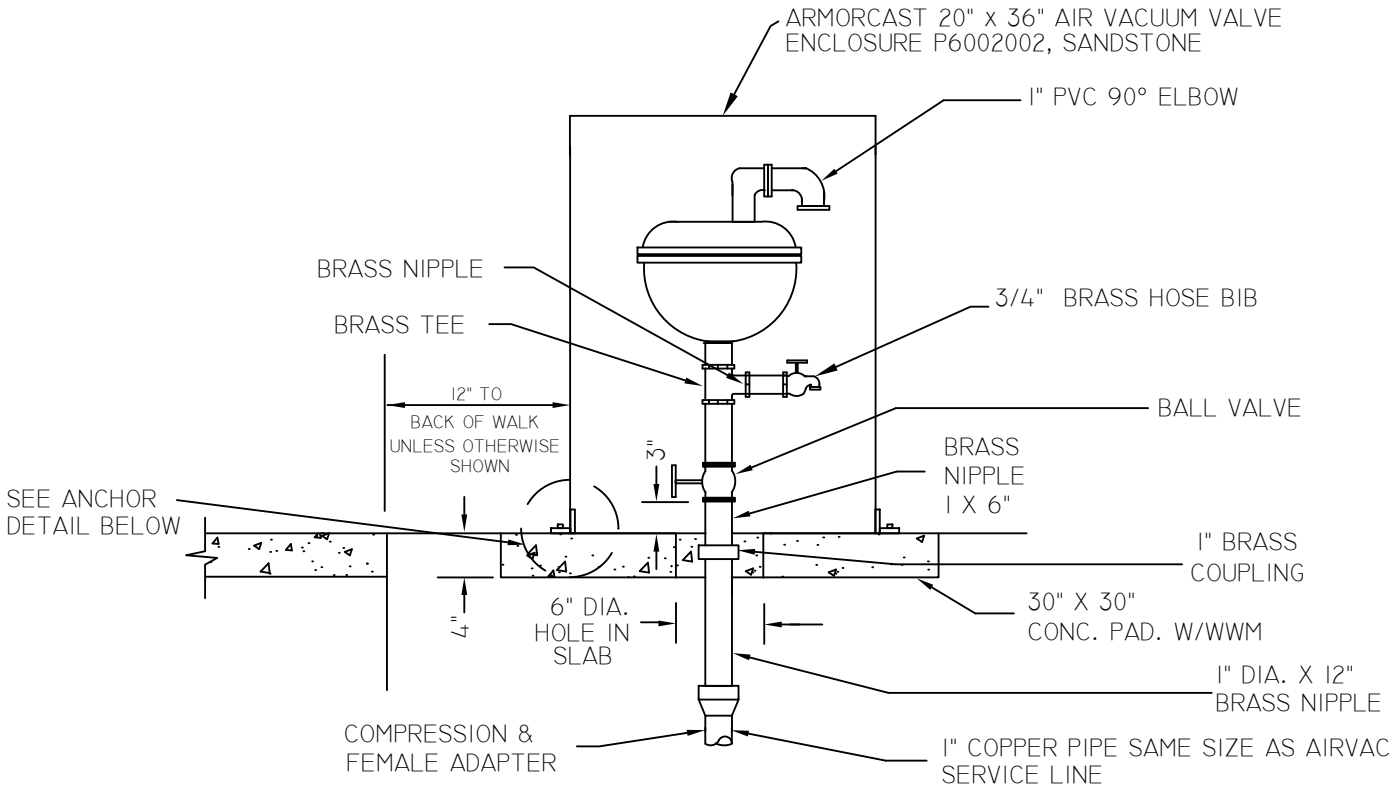


1" COMB. AIR RELEASE AND VACUUM VALVE ASSEMBLY

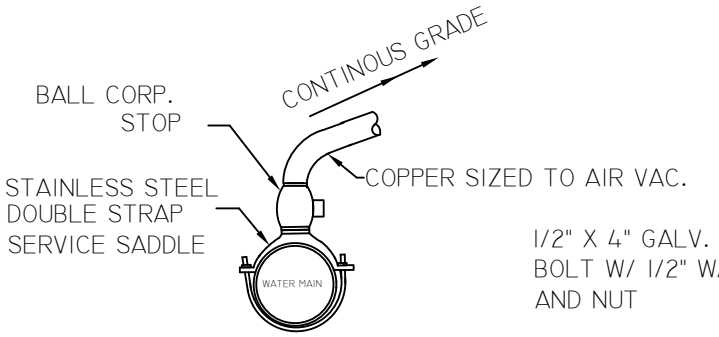


AIR VAC CONNECTION AT HIGH POINT ON WATER MAIN

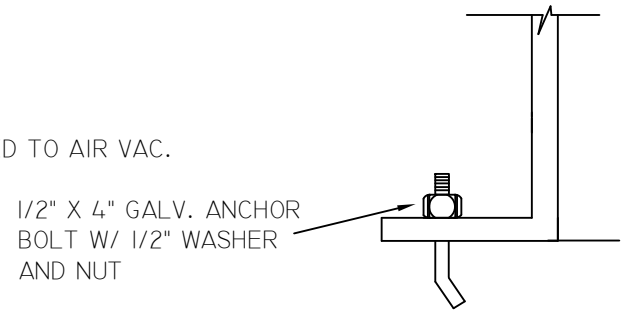


ANCHOR DETAIL

| City of Simi Valley<br>DEPARTMENT OF PUBLIC WORKS<br>DISTRICT ENGINEERING | VENTURA COUNTY WATERWORKS DISTRICT NO. 8<br>COMBINATION AIR RELEASE AND VACUUM VALVE INSTALLATION | | PLATE<br>13<br>1 OF 2 |
|---|---|---|---|
| | RECOMMENDED:<br>ASST. DIRECTOR OF PUBLIC WORKS/DIST. ENGR. | APPROVED:<br>DIRECTOR OF PUBLIC WORKS | MAR 05 |

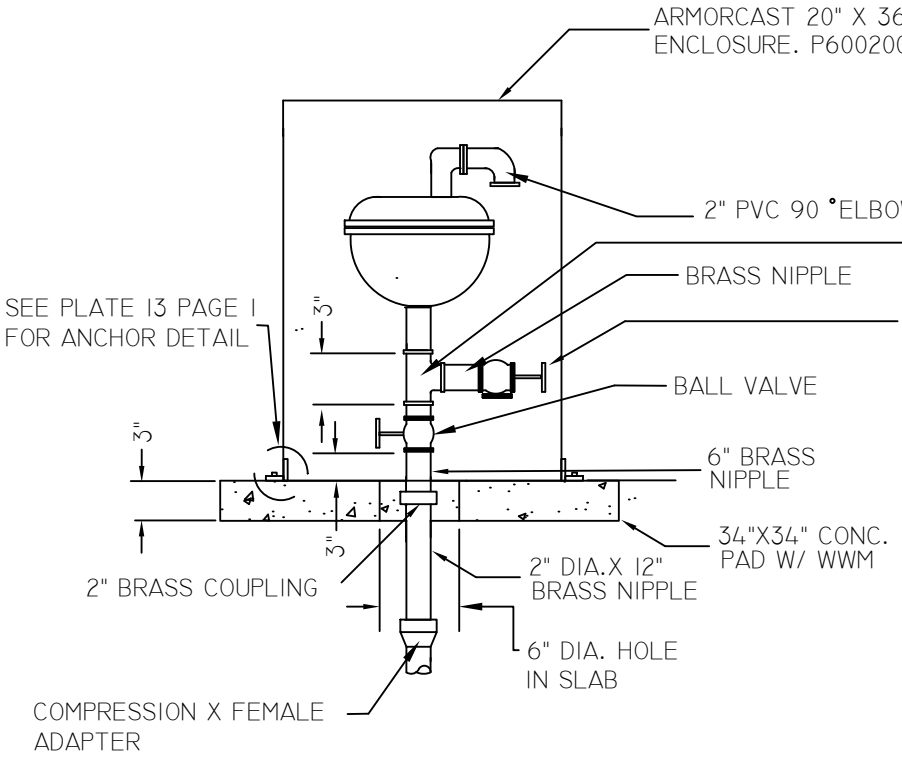


2" COMB. AIR RELEASE AND VACUUM VALVE ASSEMBLY

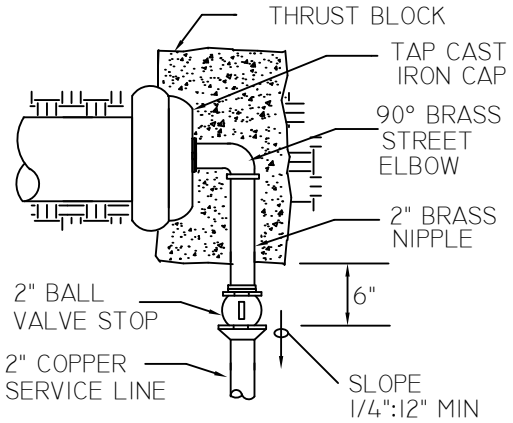


END-OF-MAIN CONNECTION

NOTES

1. SERVICE LINE TO BE LAID UPHILL AT POSITIVE SLOPE.
2. ASSEMBLIES IN EASEMENTS OR STREETS WITHOUT CURBS REQUIRE GUARD POSTS. GUARD POSTS TO BE 6" LENGTHS OF 4" STD. WT PIPE FILLED WITH GROUT AND SET 3' BELOW GRADE IN 18" O.D. CONC. BASE POSTS TO BE PLACED 2' IN FRONT OF AND 2'-6" EACH SIDE OF COMB. AIR RELEASE AND VACUUM VALVE ASSEMBLY.
3. USE 2" SERVICE LINES AND APPURTENANCES FOR END OF LINE LOCATIONS REGARDLESS OF VALVE SIZE REQUIRED.
4. ALL PIPING SHALL BE EXTRA STRONG BRASS AND SHALL BE OF THE SAME NOMINAL SIZE AS THE VALVE.
5. LOCATE EDGE OF HOUSING 12" BEHIND BACK OF SIDEWALK.
6. VALVE ASSEMBLY AND HOUSING SHALL NOT BE LOCATED IN PARKWAYS.

| | | |
|---|---|---|
| City of Simi Valley<br>DEPARTMENT OF PUBLIC WORKS | VENTURA COUNTY WATERWORKS DISTRICT NO. 8 | PLATE |
| | COMBINATION AIR RELEASE AND VACUUM VALVE INSTALLATION | 13<br>2 OF 2 |
| DISTRICT ENGINEERING | RECOMMENDED: / APPROVED: | MAR 05 |
| | ASST. DIRECTOR OF PUBLIC WORKS/DIST. ENGR. / DIRECTOR OF PUBLIC WORKS | |

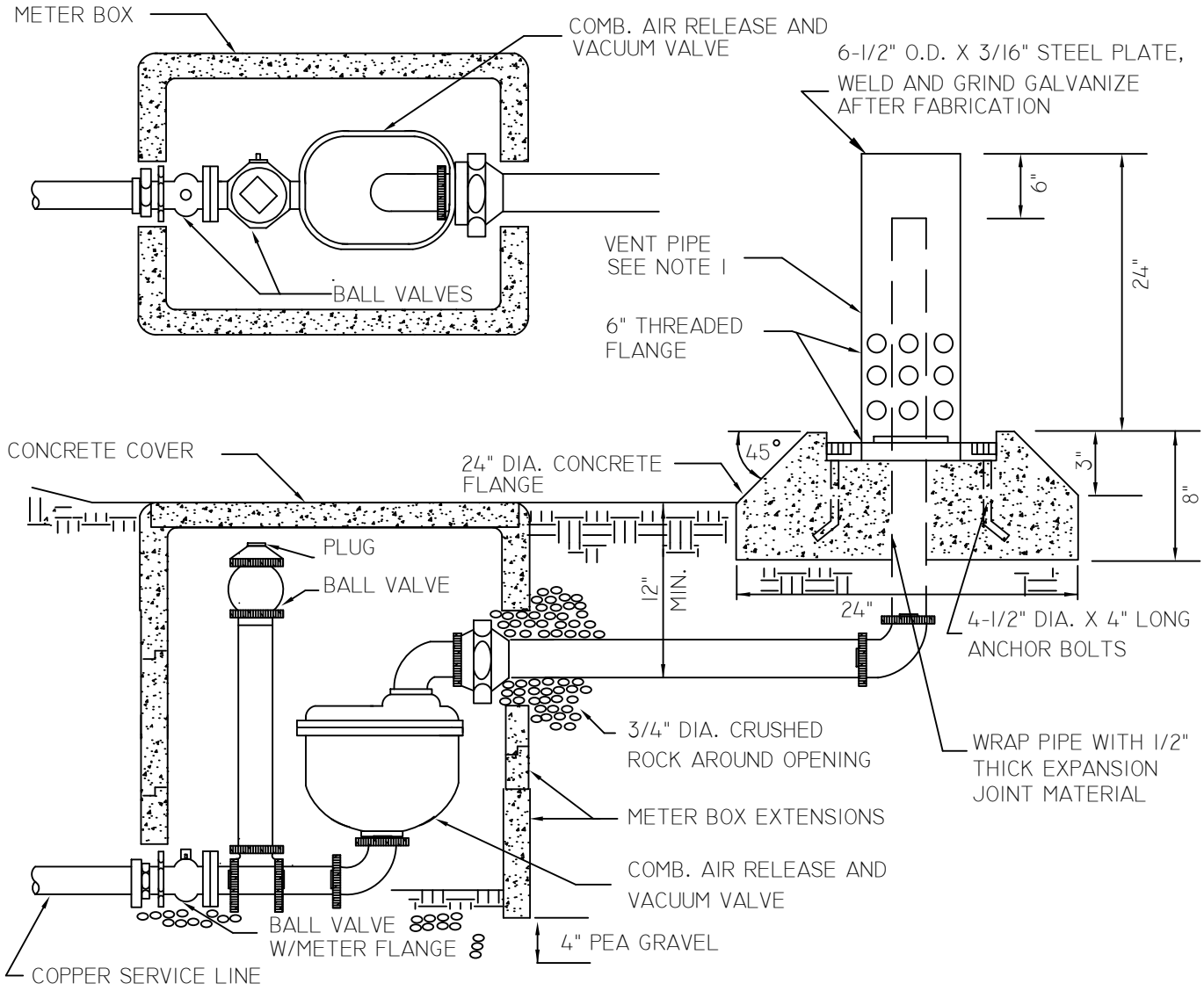


NOTES:

1. 6" DIA. STD. STEEL PIPE VENT 24" LONG, DRILL 3 ROWS, 6-1/2" DIA. HOLES PER ROW THREAD BOTTOM OF PIPE, GALV. AFTER FABRICATION.
2. ALL PIPING TO BE EXTRA STRONG BRASS, SIZE TO ACCOMMODATE AIR AND VAC. VALVE
3. SERVICE LINE FROM MAIN TO ASSEMBLY TO BE LAID UPHILL AT 2% SLOPE OR GREATER.
4. THIS INSTALLATION REQUIRES APPROVAL BY THE DISTRICT ENGINEER PRIOR TO CONSTRUCTION.
5. LOCATE EDGE OF VENT PIPE HOUSING FOUNDATION 12" FROM BACK OF SIDEWALK.
6. VENT PIPE HOUSING SHALL NOT BE LOCATED IN PARKWAYS.

| | | |
|---|---|---|
| City of Simi Valley<br>DEPARTMENT OF PUBLIC WORKS | VENTURA COUNTY WATERWORKS DISTRICT NO. 8 | PLATE |
| | COMBINATION AIR RELEASE & VACUUM VALVE FOR SPECIAL INSTALLATION | 14 |
| DISTRICT ENGINEERING | RECOMMENDED: /S/ — DEPUTY DIR./DISTRICT ENGR. | APPROVED: /S/ — DIRECTOR OF PUBLIC WORKS | JAN 00 |

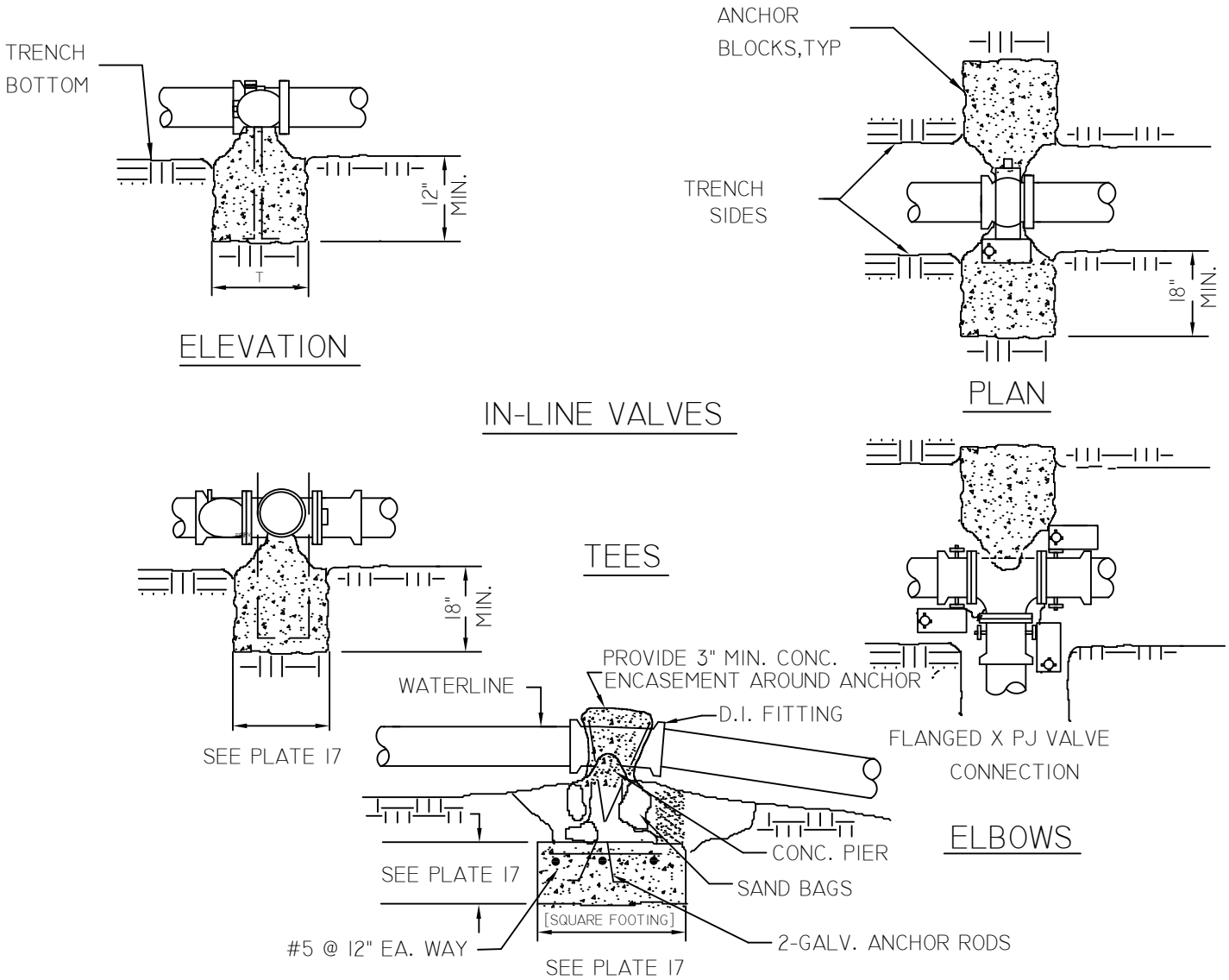


NOTES:

1. ANCHOR BLOCKS SHALL BEAR ON UNDISTURBED SOIL.
2. FOR ANCHOR BLOCK DIMENSIONS SEE PLATE 17.
3. SPECIAL DESIGN AND DISTRICT ENGINEER APPROVAL REQUIRED FOR VERTICAL ANGLES GREATER THAN 22 1/2 DEGREES.
4. REFER TO SECTION 3.4 "MAIN LINE FITTINGS" AND SECTION 7.11 "INSTALLATION OF VALVES AND FITTINGS" FOR INFORMATION CONCERNING THE INSTALLATION AND PROTECTION OF BOLTED CONNECTIONS. WRAP AND TAPE FITTINGS WITH POLYETHYLENE PRIOR TO POURING THRUST BLOCKS.

| City of Simi Valley<br>DEPARTMENT OF PUBLIC WORKS | VENTURA COUNTY WATERWORKS DISTRICT NO. 8 | | PLATE |
|---|---|---|---|
| | ANCHOR BLOCKS | | 15 |
| DISTRICT ENGINEERING | RECOMMENDED: /S/<br>DEPUTY DIR./DISTRICT ENGR. | APPROVED: /S/<br>DIRECTOR OF PUBLIC WORKS | JAN 00 |

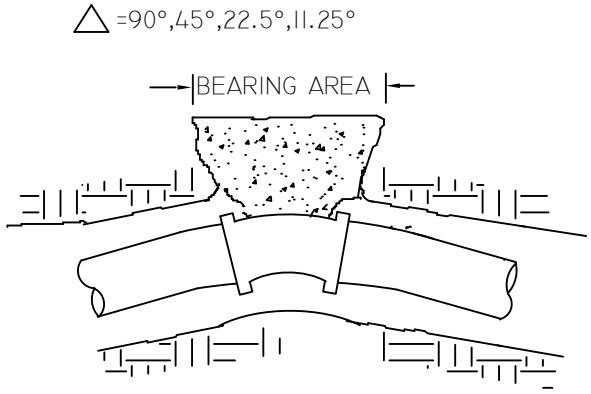


ELBOWS

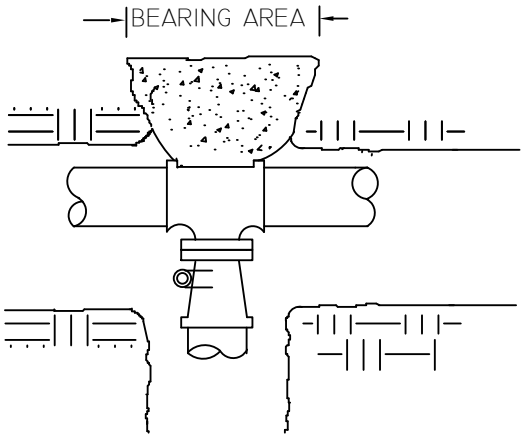


TEES

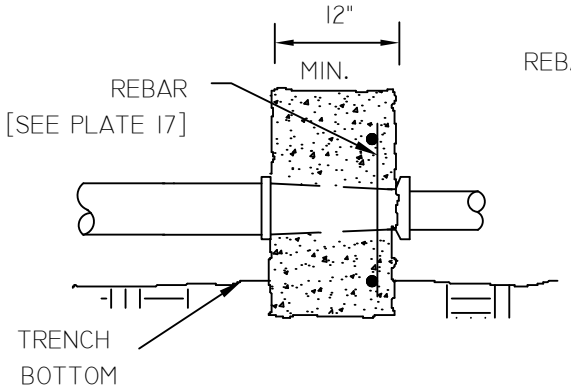


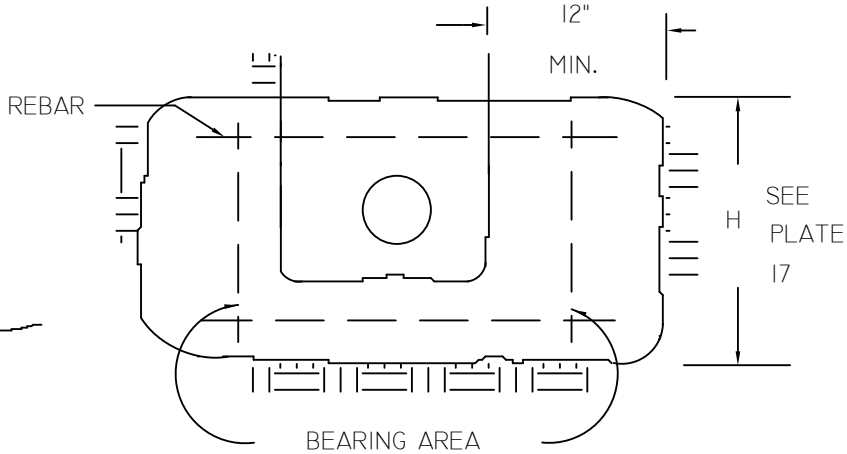


REDUCER

NOTES:

1. THRUST BLOCKS SHALL BEAR ON UNDISTURBED SOIL.
2. FOR THRUST BLOCK SIZES SEE PLATE 17.
3. SPECIAL DESIGN & DISTRICT ENGINEER APPROVAL REQUIRED FOR VERTICAL ANGLES GREATER THAN 45. °
4. CONCRETE TO EXTEND MIN. 12" ABOVE AND 6" BELOW PIPE INTO UNDISTURBED SOIL.

| | | |
|---|---|---|
| City of Simi Valley<br>DEPARTMENT OF PUBLIC WORKS | VENTURA COUNTY WATERWORKS DISTRICT NO. 8 | PLATE |
| | THRUST BLOCK FOR PUSH JOINT/ MECHANICAL JOINT CONNECTIONS | 16<br>1 OF 2 |
| DISTRICT ENGINEERING | RECOMMENDED: /S/ DEPUTY DIR./DISTRICT ENGR. — APPROVED: /S/ DIRECTOR OF PUBLIC WORKS | JUNE 99 |

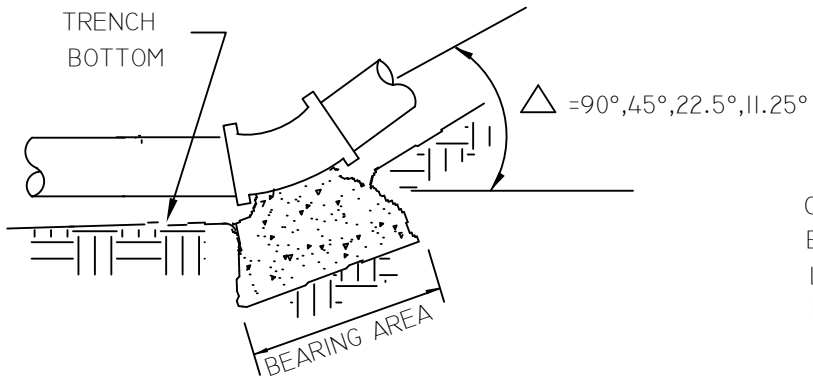


VERTICAL ELBOW

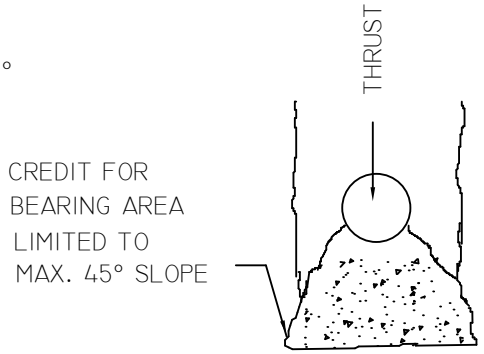


SECTION OF VERTICAL THRUST BLOCK

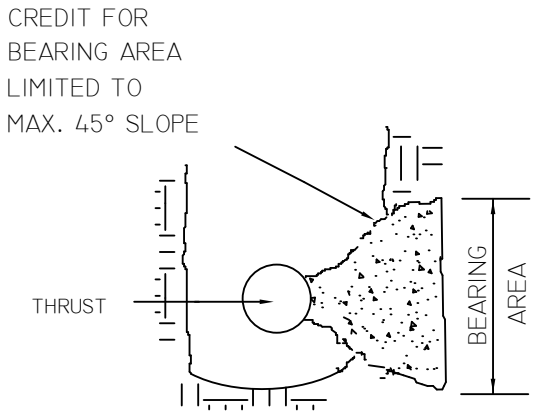


SECTION OF HORIZONTAL THRUST BLOCK

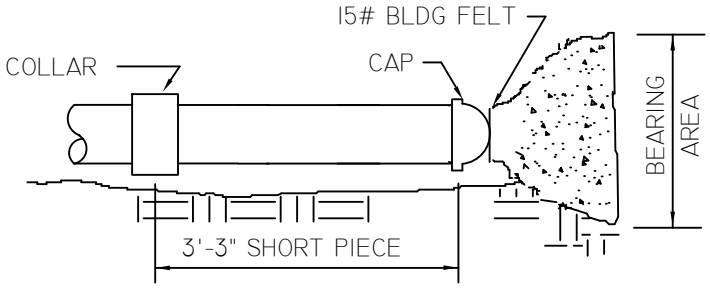


CAPPED END

NOTES:

1. THRUST BLOCKS SHALL BEAR ON UNDISTURBED SOIL.
2. FOR THRUST BLOCK SIZES SEE PLATE 17.
3. SPECIAL DESIGN & DISTRICT ENGINEER APPROVAL REQUIRED FOR VERTICAL ANGLES GREATER THAN 45. °
4. CONCRETE TO EXTEND MIN. 12" ABOVE AND 6" BELOW PIPE INTO UNDISTURBED SOIL.

| | | |
|---|---|---|
| City of Simi Valley<br>DEPARTMENT OF PUBLIC WORKS | VENTURA COUNTY WATERWORKS DISTRICT NO. 8 | PLATE |
| | THRUST BLOCK FOR PUSH JOINT/ MECHANICAL JOINT CONNECTIONS | 16<br>2 OF 2 |
| DISTRICT ENGINEERING | RECOMMENDED: /S/<br>DEPUTY DIR./DISTRICT ENGR. | APPROVED: /S/<br>DIRECTOR OF PUBLIC WORKS<br>JUNE 99 |

## THRUST BLOCK SIZES

### ( MINIMUM BEARING AREA IN SQUARE FEET LOCATIONS)

| PIPE SIZE | ELBOWS | | | | CAPPED END OR TEE | REDUCER H | REBAR |
|---|---|---|---|---|---|---|---|
| | 90 | 45 | 22 1/2 | 11 1/4 | | | |
| 6" | 8 / 10 | 5 / 6 | 3 / 3 | 3 / 3 | 6 / 8 | 2'-0" / 2'-0" | NO. 3 |
| 8" | 13 / 16 | 8 / 11 | 4 / 6 | 4 / 6 | 10 / 14 | 2'-0" / 2'-6" | NO. 4 |
| 10" | 16 / 20 | 10 / 12 | 7 / 9 | 7 / 9 | 13 / 16 | 2'-6" / 3'-0" | NO. 5 |
| 12" | 20 / 26 | 11 / 14 | 9 / 12 | 9 / 12 | 16 / 20 | 3'-0" / 3'-0" | NO. 5 |

FOR CLASS 150 PIPE — 14 / 19 — FOR CLASS 200 PIPE

## ANCHOR BLOCK SIZES

### ( DIMENSIONS LOCATIONS FLANGED VALVE )

| PIPE SIZE | IN LINE VALVE | | CONNECTIONS | | | ELBOWS | | REBAR |
|---|---|---|---|---|---|---|---|---|
| | T | REBAR | T | L | REBAR | | | |
| 6" | 12" | NO. 5 | 12" | 2'-6" | NO. 5 | 3'-0" | 12" | NO. 5 |
| 8" | 18" | NO. 5 | 18" | 3'-9" | NO. 5 | 3'-6" | 18" | NO. 5 |
| 10" | 24" | NO. 6 | 24" | 4'-10" | NO. 6 | 4'-6" | 24" | NO. 6 |
| 12" | 24" | NO. 6 | 24" | 5'-0" | NO. 6 | 5'-6" | 24" | NO. 6 |

NOTES:

1. SIZES BASED ON 1500 PSF BEARING SOIL. SPECIAL DESIGN REQUIRED FOR SOILS OF LOWER BEARING STRENGTH.

| City of Simi Valley | VENTURA COUNTY WATERWORKS DISTRICT NO. 8 | | PLATE |
|---|---|---|---|
| DEPARTMENT OF PUBLIC WORKS | THRUST AND ANCHOR BLOCK SIZES | | 17 |
| DISTRICT ENGINEERING | RECOMMENDED: /S/ | APPROVED: /S/ | JUNE 99 |
| | DEPUTY DIR./DISTRICT ENGR. | DIRECTOR OF PUBLIC WORKS | |

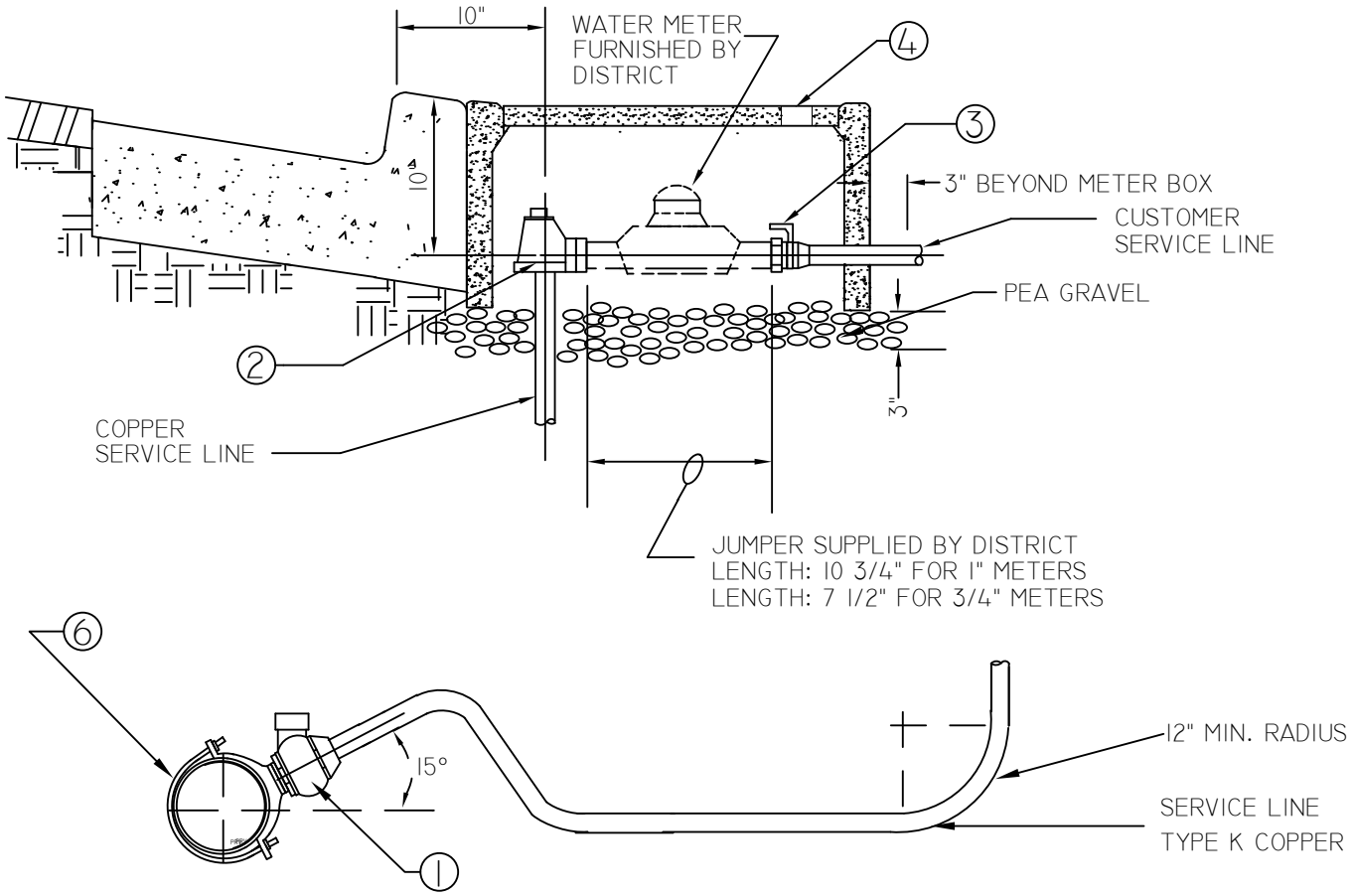


1. 1" BALL CORPORATION STOP REFER TO SECTION 3.5C.
2. 1" ANGLE BALL METER STOP REFER TO SECTION 3.5D.
3. 1" CUSTOMER BALL HAND VALVE REFER TO SECTION 3.5E.
4. METER BOX W/ RADIO READ LID 12"X20" AND READING HOLE OFFSET FROM CENTER OF LID. REFER TO SECTION 3.6.
5. DOUBLE STRAP SERVICE SADDLE REFER TO SECTION 3.5B.

NOTES:

1. CONTRACTOR SHALL INSTALL A SPACER OR JUMPER PIPE SUPPLIED BY DISTRICT BETWEEN THE ANGLE METER STOP AND CUSTOMER HAND VALVE UNTIL THE WATER METER IS INSTALLED.
2. THE SERVICE LINE SHALL BE LAYED IN THE TRENCH IN A SIDE TO SIDE FASHION TO ALLOW ADDITIONAL LENGTH FOR SETTLEMENT AN/OR EXPANSION AND CONTRACTION.
3. SERVICE LINES TO RECEIVE BACKFILL OF IMPORTED SAND WITHIN PIPE ZONE. [SEE PLATE 3]
4. SERVICE LINE SHALL BE 1" COPPER FOR 3/4" & 1" SERVICES.

| | | | |
|---|---|---|---|
| City of Simi Valley<br>DEPARTMENT OF PUBLIC WORKS | VENTURA COUNTY WATERWORKS DISTRICT NO. 8 | | PLATE |
| | 3/4" & 1" WATER METER SERVICE INSTALLATION | | 18 |
| DISTRICT ENGINEERING | RECOMMENDED: /S/<br>DISTRICT ENGR. | APPROVED: /S/<br>DIRECTOR OF PUBLIC WORKS | NOV. 02 |

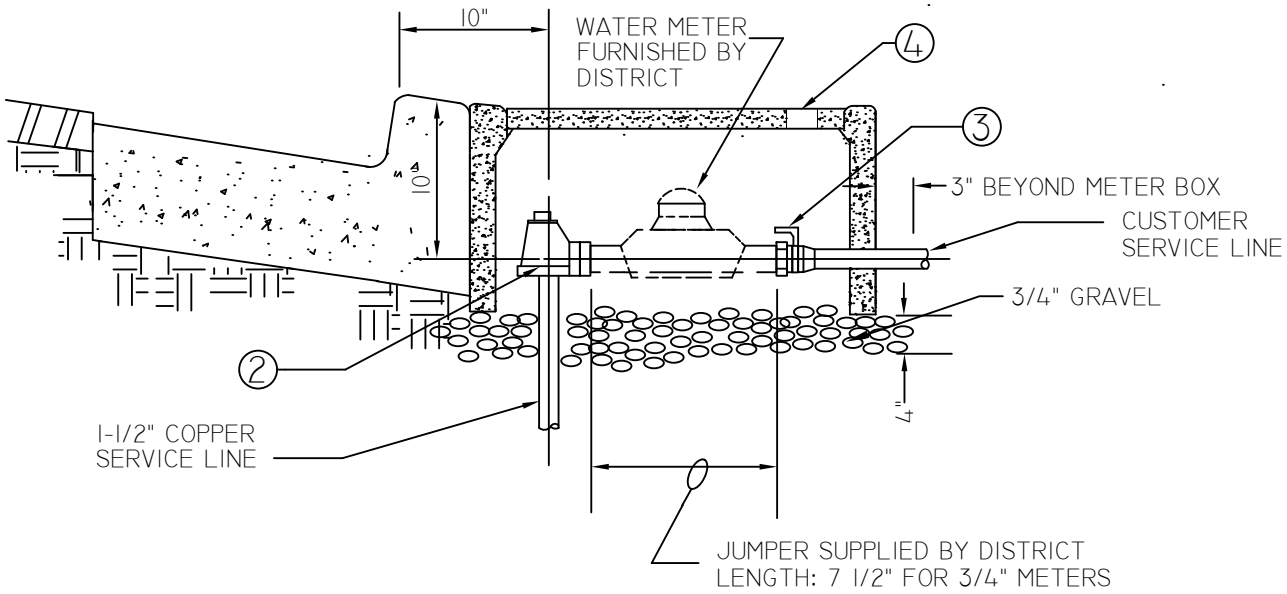


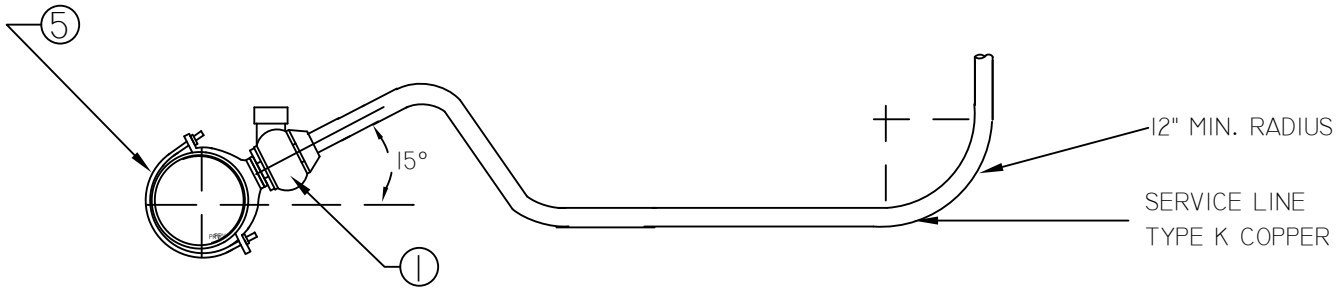


1. 1-1/2" BALL CORPORATION STOP REFER TO SECTION 3.5C.
2. U-BRANCH ASSEMBLIES. FORD UVB 43-62W (FULL 3/4" ANGLE STOP)
3. 3/4" CUSTOMER BALL HAND VALVE REFER TO SECTION 3.5E.
4. METER BOX W/ NEPTUNE RADIO READ LID 12"X20" AND READING HOLE OFFSET FROM CENTER OF LID. AMERICAST PRODUCTS COVER # A6000491-H9 FOR SIMI VALLEY WATER BOX # A6000490.
5. DOUBLE STRAP SERVICE SADDLE REFER TO SECTION 3.5B.

NOTES:

1. CONTRACTOR SHALL INSTALL A SPACER OR JUMPER PIPE SUPPLIED BY DISTRICT BETWEEN THE ANGLE METER STOP AND CUSTOMER HAND VALVE UNTIL THE WATER METER IS INSTALLED.
2. THE SERVICE LINE SHALL BE LAYED IN THE TRENCH IN A SIDE TO SIDE FASHION TO ALLOW ADDITIONAL LENGTH FOR SETTLEMENT AN/OR EXPANSION AND CONTRACTION.
3. SERVICE LINES TO RECEIVE BACKFILL OF IMPORTED SAND WITHIN PIPE ZONE. [SEE PLATE 3]
4. SERVICE LINE SHALL BE 1-1/2" COPPER FOR DUAL 3/4" SERVICES.

| | | | |
|---|---|---|---|
| City of Simi Valley | VENTURA COUNTY WATERWORKS DISTRICT NO. 8 | | PLATE |
| DEPARTMENT OF PUBLIC WORKS | 3/4" DUAL WATER METER SERVICE INSTALLATION | | 18 A |
| | RECOMMENDED: | APPROVED: | MAR 05 |
| DISTRICT ENGINEERING | ASST. DIRECTOR OF PUBLIC WORKS/DIST.ENGR. | DIRECTOR OF PUBLIC WORKS | |

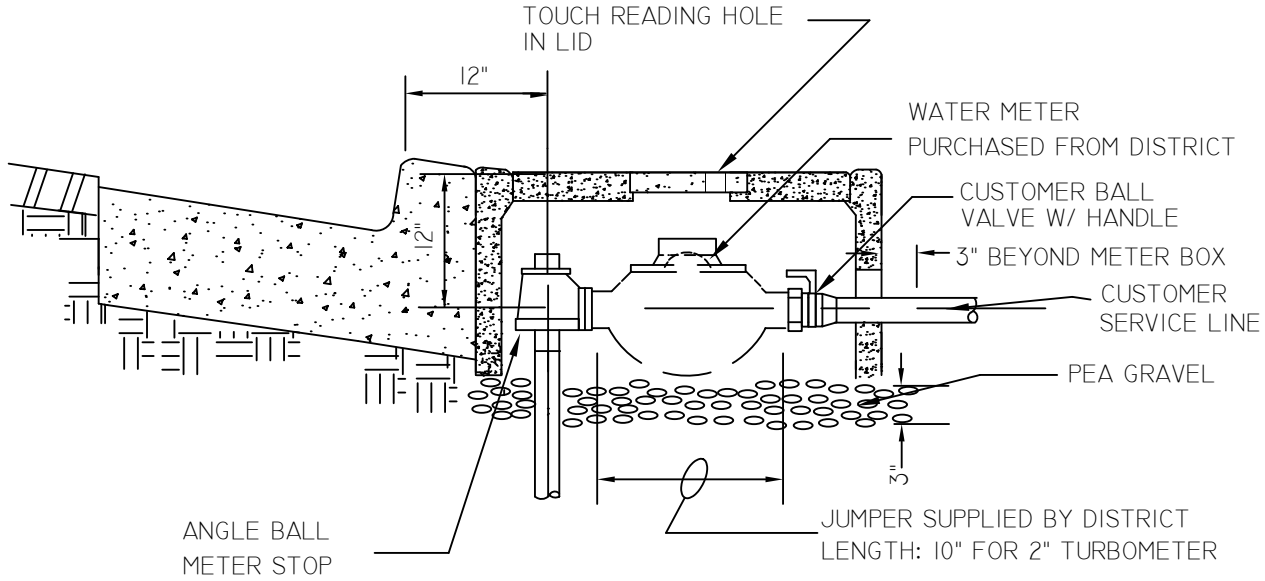


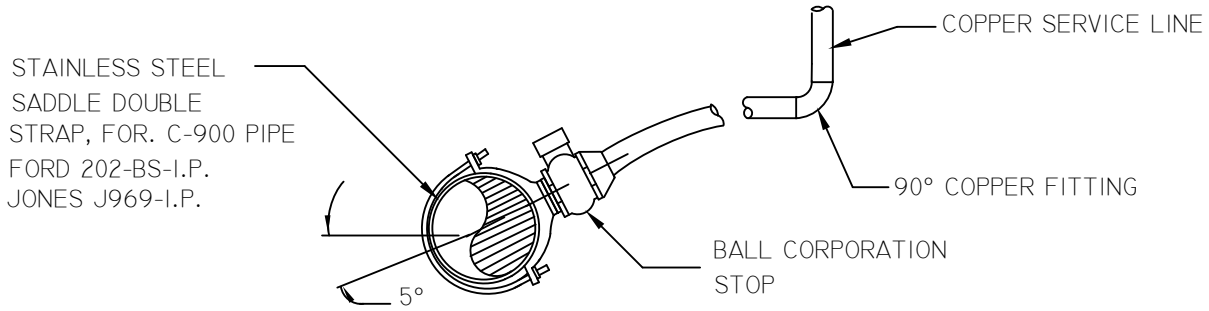


NOTES:

1. CONTRACTOR SHALL INSTALL A SPACER OR JUMPER PIPE SUPPLIED BY THE DISTRICT BETWEEN THE ANGLE METER STOP AND CUSTOMER HAND VALVE UNTILL THE WATER METER IS INSTALLED.
2. SERVICE LINES SHALL BE 2-INCH SIZE FOR 2" SIZE METER & 1-1/2" METERS INSTALLATIONS.
3. SERVICE LINE TO RECEIVE BACKFILL OF IMPORTED SAND WITHIN PIPE ZONE [ SEE PLATE 3 ].

| RECOMMENDED MATERIALS | MANUFACTURER |
|---|---|
| BALL CORPORATION STOP 2" | JONES 1957 SG, FORD FB 1100-7-TA |
| ANGLE BALL METER STOP 2" | JONES 1975W SG, FORD BFA 43-777 W |
| CUSTOMER BALL HAND VALVE 2" | JONES 1913, FORD BF13-777 WW/HANDEL. |
| METER BOX 17" X 30" W/ TOUCH READING HOLE OFFSET FROM CENTER OF LID | BROOKS 66S OR QUICKSET W30 |

City of Simi Valley

DEPARTMENT OF PUBLIC WORKS

DISTRICT ENGINEERING

VENTURA COUNTY WATERWORKS DISTRICT NO. 8

2" TURBO WATER METER
SERVICE INSTALLATION

PLATE 19

RECOMMENDED: /S/
DEPUTY DIR./DISTRICT ENGR.

APPROVED: /S/
DIRECTOR OF PUBLIC WORKS

JAN 00

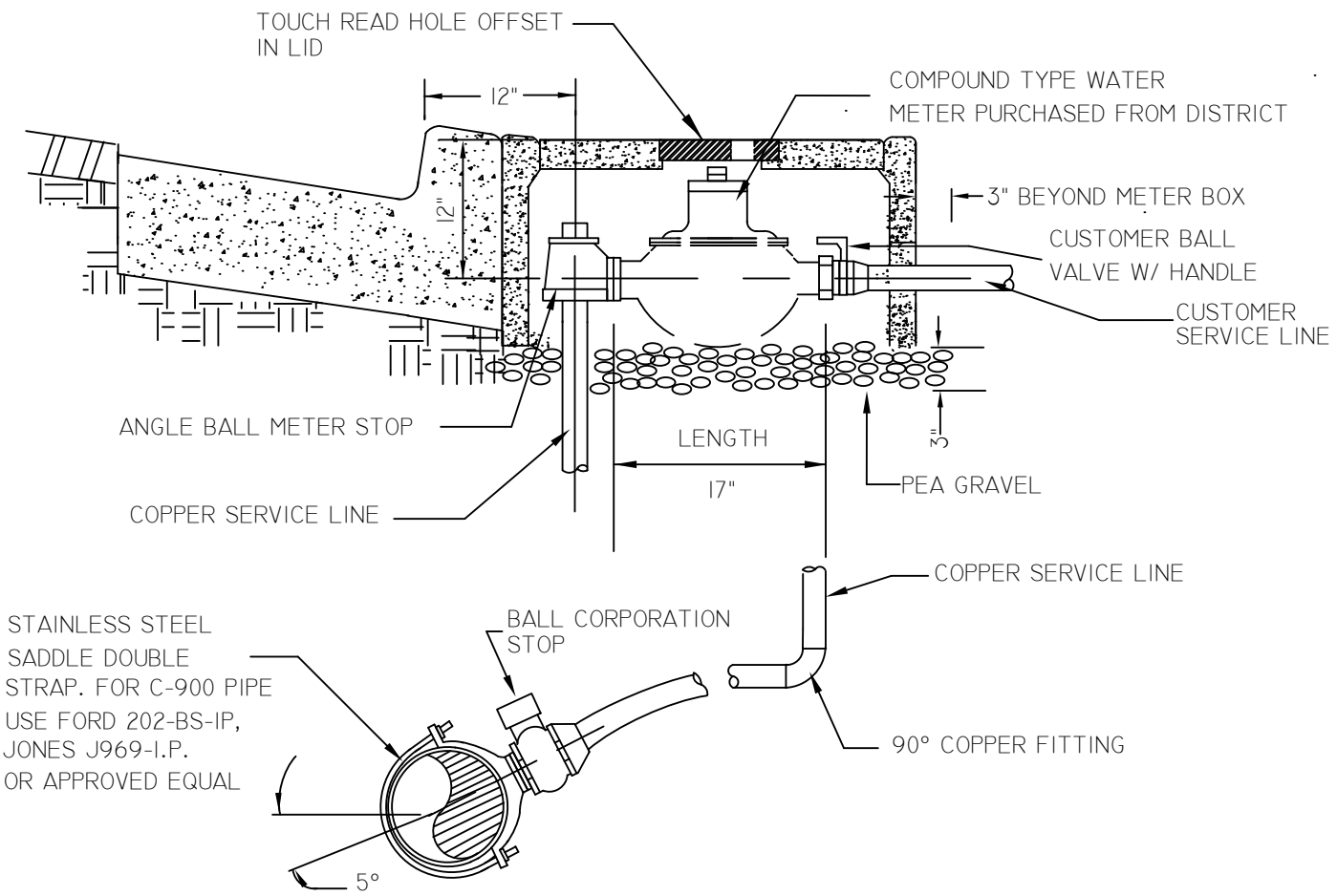


NOTES:

1. THE CONTRACTOR SHALL INSTALL A SPACER OR JUMPER PIPE BETWEEN THE ANGLE METER STOP AND CUSTOMER HAND VALVE (SUPPLIED BY DISTRICT) UNTIL THE WATER METER IS INSTALLED.
2. 2" SERVICE LINES SHALL BE REQUIRED FOR 2" SIZE METER & 1-1/2" METERS
3. SERVICE LINE TO RECEIVE BACKFILL OF IMPORTED SAND WITHIN PIPE ZONE

| RECOMMENDED MATERIALS | | MANUFACTURER |
|---|---|---|
| CORPORATION STOP | 2" | JONES 1957 SG, FORD FB 1100-7-TA |
| ANGLE METER STOP | 2" | JONES 1975W SG, FORD BFA 43-777 W |
| CUSTOMER HAND VALVE | 2" | JONES 1913, FORD BF13-777 W W/HANDLE |
| METER BOX W/ READING HOLE IN THE INNER LID | 17" X 30" W/ 2 PIECE LID | BROOKS 66S OR QUICKSET W30 |

City of Simi Valley

DEPARTMENT OF PUBLIC WORKS

DISTRICT ENGINEERING

VENTURA COUNTY WATERWORKS DISTRICT NO. 8

2" COMPOUND WATER
METER SERVICE INSTALLATION

PLATE 20

RECOMMENDED: /S/
DEPUTY DIR./DISTRICT ENGR.

APPROVED: /S/
DIRECTOR OF PUBLIC WORKS

JAN 00

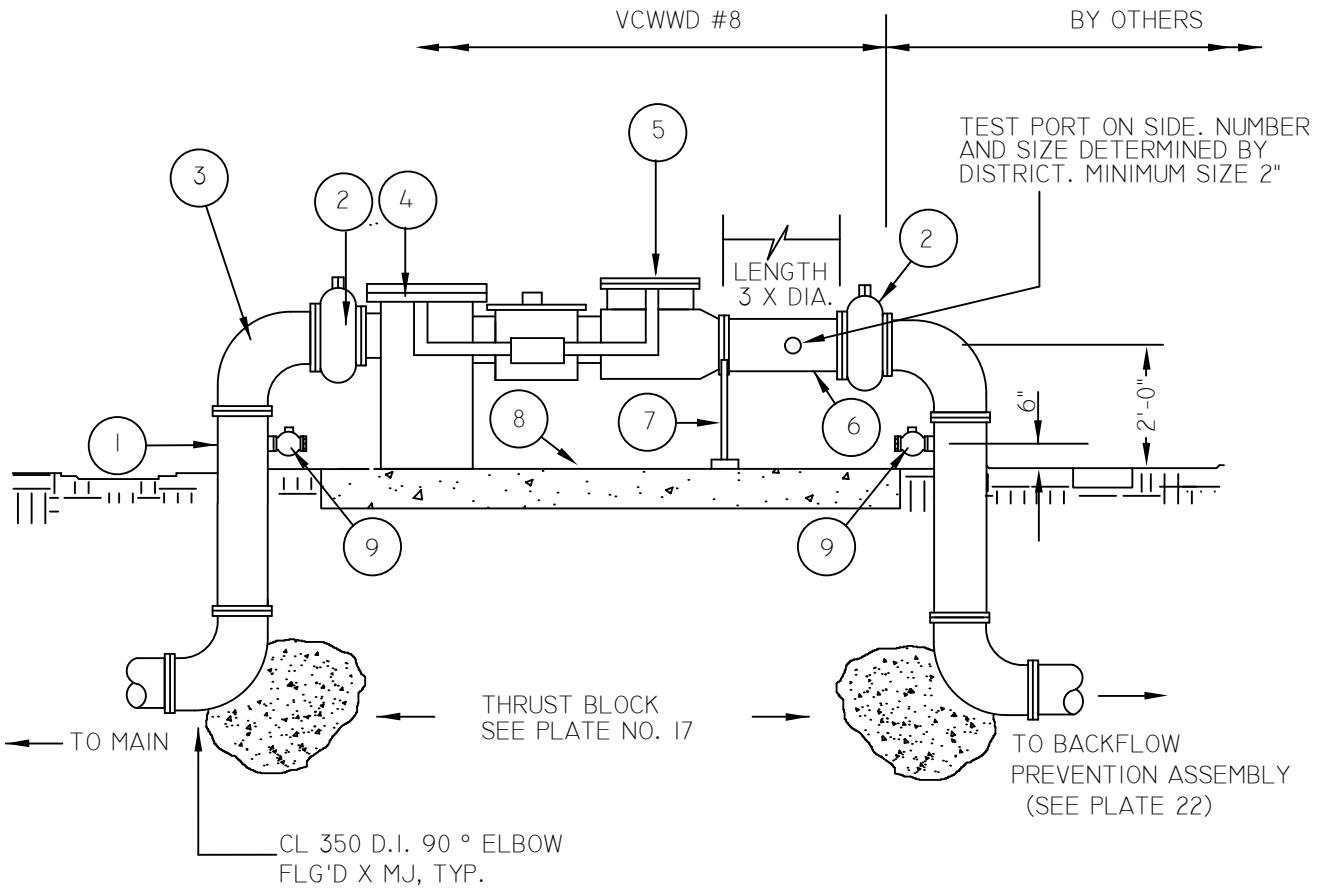


## ELEVATION

1. CL. 350 D.I.P. SPOOL
2. R.S.W.G.V. WITH INSULATING FLANGE KIT (BOTH SIDES OF VALVES)
3. 90° D.I. CH 350 ELL. FLG'D X FLG'D
4. STRAINER [BY DISTRICT]
5. METER [BY DISTRICT]
6. TEST SPOOL/ PLUGGED
7. PIPE SUPPORT, GALVANIZED(ANCHORED TO SLAB)
8. 12"X12"X4" CONCRETE SUPPORT PAD, TYP.
9. 2" PORT W/ 2" BALL VALVE (NO LEVER) AND PLUG.(SEE NOTE 2)

NOTES:

1. THIS PLATE DEPICTS A GENERAL INSTALLATION. PRIOR TO CONSTRUCTION, THE CONTRACTOR SHALL SUBMIT TO THE DISTRICT FOR APPROVAL A PLAN SHOWING THE ACTUAL INSTALLATION, INCLUDING A LIST OF MATERIALS, MANUFACTURES NAMES AND PART OR MODEL NUMBERS.

2. LARGER METER ASSEMBLIES MAY REQUIRE LARGER AND PERMANENT BY- PASSES.

| City of Simi Valley<br>DEPARTMENT OF PUBLIC WORKS<br>DISTRICT ENGINEERING | VENTURA COUNTY WATERWORKS DISTRICT NO. 8<br>3" METER AND LARGER INSTALLATION | | PLATE<br>21 |
|---|---|---|---|
| | RECOMMENDED:<br>/S/<br>DEPUTY DIR./DISTRICT ENGR. | APPROVED:<br>/S/<br>DIRECTOR OF PUBLIC WORKS | JUNE 99 |

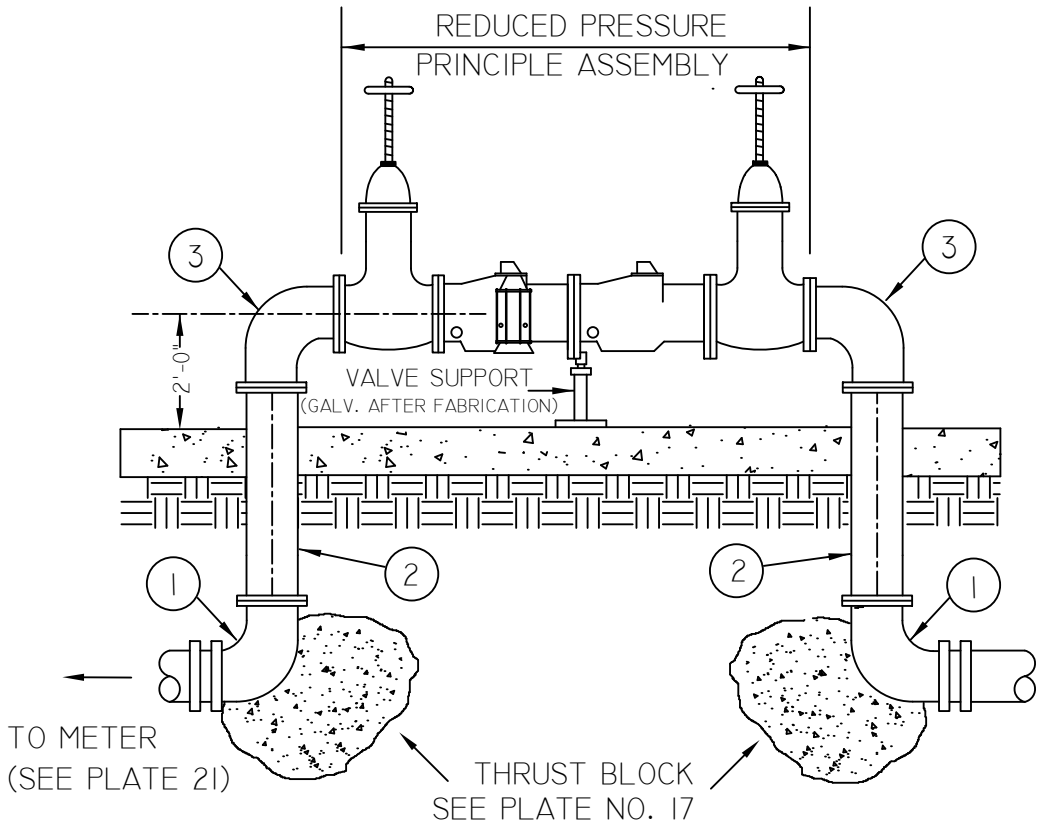


ELEVATION

ASSEMBLY TO BE APPROVED BY COUNTY OF VENTURA, ENVIRONMENTAL HEALTH DIVISION.
NO DIRECT CONNECTION BETWEEN THE METER AND THE RP ASSEMBLY IS PERMITTED.

THIS ASSEMBLY SHALL BE INSPECTED BY THE VENTURA COUNTY WATERWORKS DISTRICT #8. AFTER WATER DISTRICT'S APPROVAL, ASSEMBLY SHALL BE TESTED BY A COUNTY APPROVED TESTER. THE DEVELOPER/OWNER IS RESPONSIBLE FOR THE COST OF TESTING THE ASSEMBLY. A COPY OF THE TEST REPORT IS TO BE SUBMITTED TO THE WATER DISTRICT. PHONE # (805) 583-6894

NOTES:

1. 90°, DUCTILE IRON ELBOW:CL 350 FLG X FLG; FLG X RT; FLG X MECHANICAL JOINT (UNI-FLANGE SHALL NOT BE USED)
2. FLANGED DUCTILE IRON SPOOL (BOTH ENDS SHALL BE FLANGED)
3. 90°, FLANGED DUCTILE IRON ELBOW CL 350.

| | | |
|---|---|---|
| City of Simi Valley<br>DEPARTMENT OF PUBLIC WORKS | VENTURA COUNTY WATERWORKS DISTRICT NO. 8 | PLATE |
| | REDUCED PRESSURE PRINCIPLE ASSEMBLY | 22 |
| DISTRICT ENGINEERING | RECOMMENDED: /S/ DEPUTY DIR./DISTRICT ENGR. RCE 20293 | APPROVED: /S/ DIRECTOR OF PUBLIC WORKS RCE 23789 |
| | | JUNE 99 |

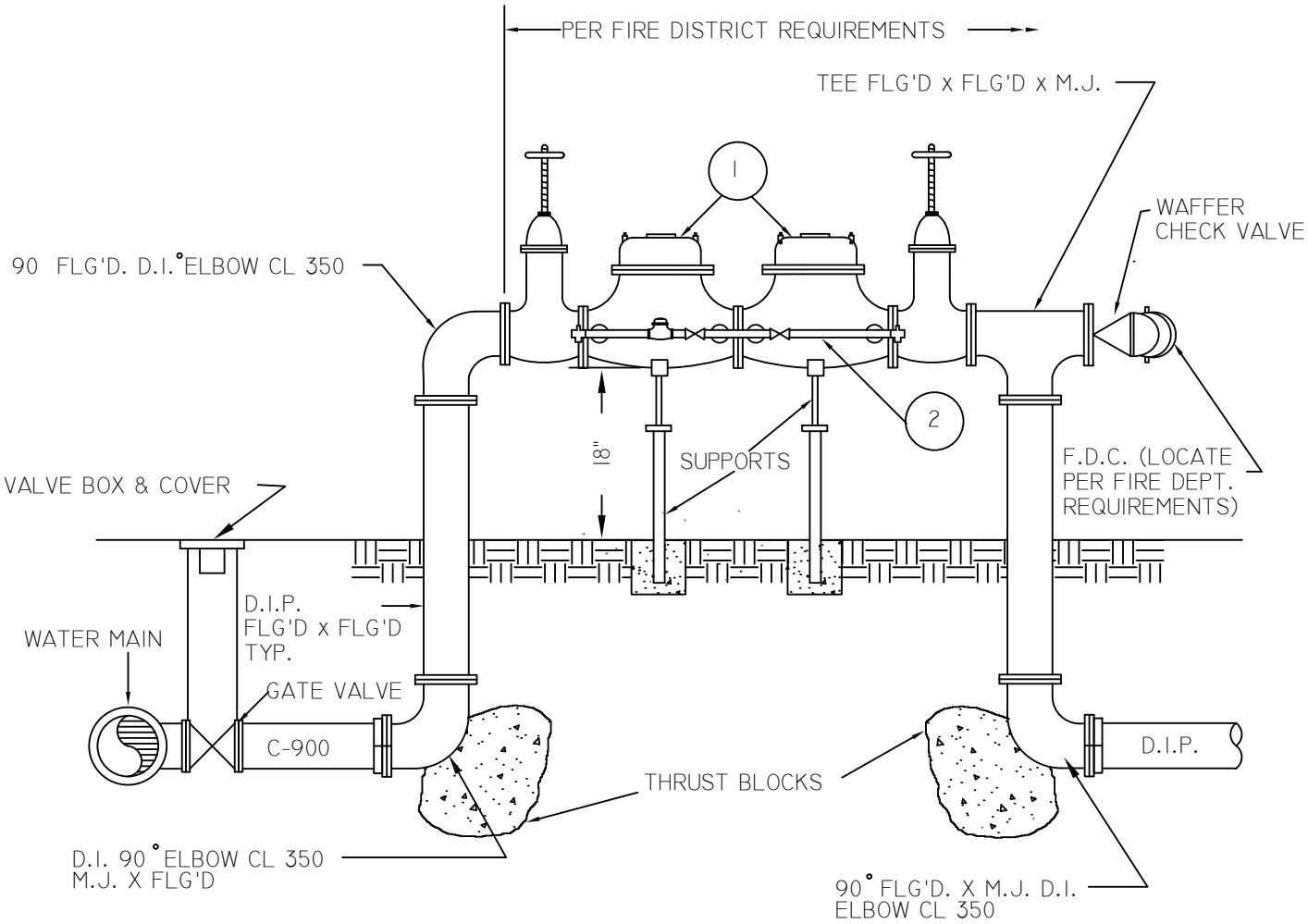


ELEVATION

NOTES:

1. IF ASSEMBLY IS TO BE LOCATED MORE THAN 5' FROM P.L. A GATE VALVE SHALL BE INSTALLED @ P.L.
2. ALL UNDERGROUND NUTS, BOLTS SHALL BE 304 S.S. WITH ANTI SIEZE LUBRICANT. EXTERIOR COAT AND WRAP ALL NUTS, BOLTS AND VALVES WITH KOPPERS BITUMASTIC NO. 50 AND WRAP & TAPE WITH POLYETHYLENE.

| KEY | DESCRIPTION OF EQUIPMENT DEVICES |
|---|---|
| 1 | APPROVED VENTURA COUNTY ENVIRONMENTAL HEALTH DIVISION. DOUBLE CHECK VALVE ASSEMBLY WITH O.S. & Y. VALVES. |
| 2 | BYPASS METER REGISTERING IN (CUBIC FEET) WITH APPROVED DOUBLE CHECK VALVE ASSEMBLY, METER SHALL BE SCHLUMBERGER, SENSUS OR APPROVED EQUAL. |

| | | | |
|---|---|---|---|
| City of Simi Valley | VENTURA COUNTY WATERWORKS DISTRICT NO. 8 | | PLATE |
| DEPARTMENT OF PUBLIC WORKS | FIRE SERVICE BACKFLOW PREVENTER | | 23 |
| DISTRICT ENGINEERING | RECOMMENDED: /S/ DEPUTY DIR./DISTRICT ENGR. | APPROVED: /S/ DIRECTOR OF PUBLIC WORKS | JUNE 99 |

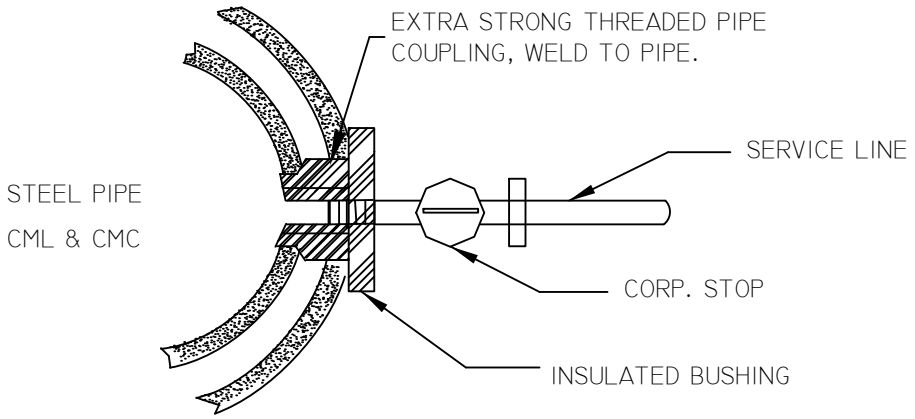


## DIELECTRIC SERVICE CONNECTION TO STEEL MAIN

( SEE NOTE 1. )

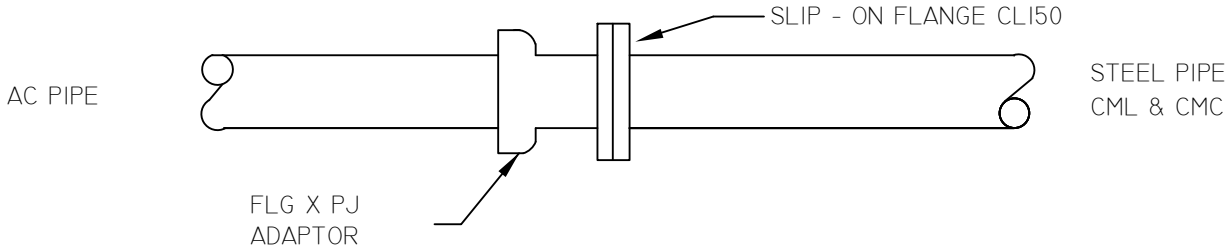


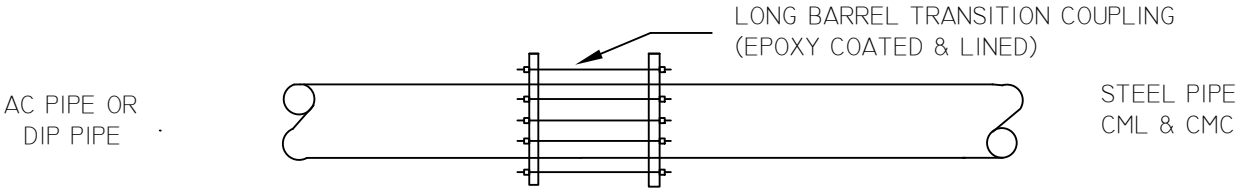


## MAIN LINE CONNECTIONS

NOTE:

1. WRAP SERVICE CONNECTION WITH 20 MIL. TAPE FROM COUPLING TO 4-FEET FROM MAIN. WRAP CORP. STOP OR VALVE IN OPEN POSITION.

| | | |
|---|---|---|
| City of Simi Valley<br>DEPARTMENT OF PUBLIC WORKS | VENTURA COUNTY WATERWORKS DISTRICT NO. 8 | PLATE |
| | DISSIMILAR PIPE CONNECTIONS | 24 |
| DISTRICT ENGINEERING | RECOMMENDED: /S/<br>DEPUTY DIR./DISTRICT ENGR. | APPROVED: /S/<br>DIRECTOR OF PUBLIC WORKS |
| | | JUNE 99 |

# TRENCHES 2' IN WIDTH OR LESS

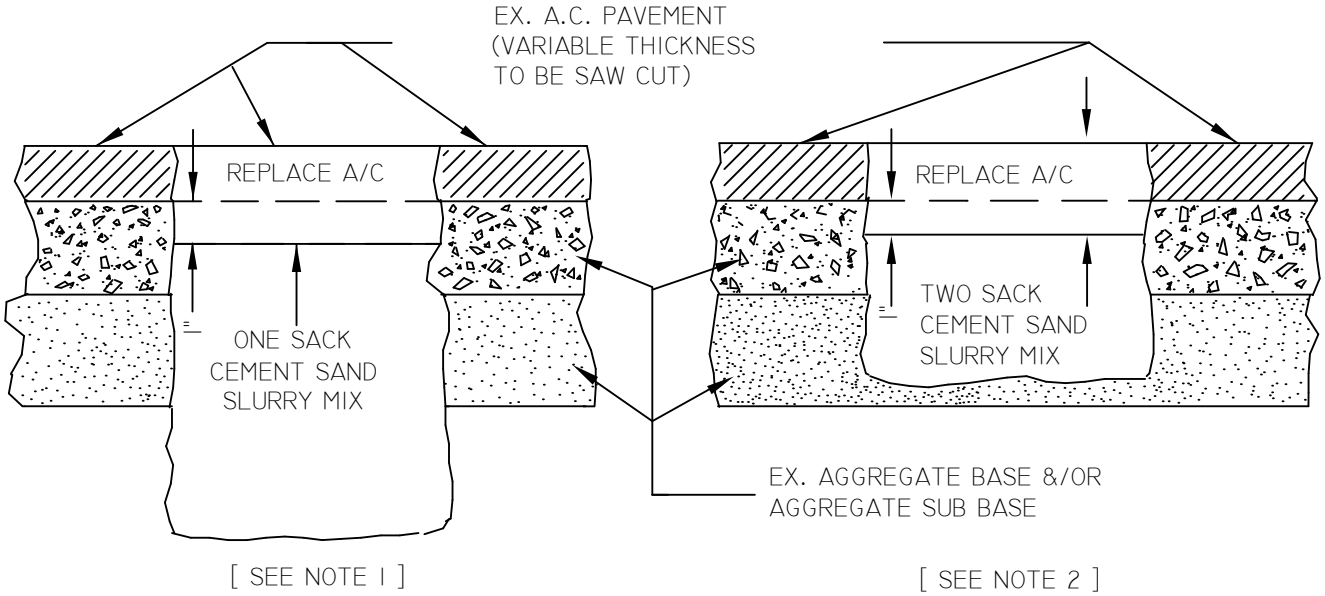


NOTES:

1. TRENCHES 2 FEET IN WIDTH OR LESS AND GREATER THAN 18 INCHES IN DEPTH SHALL BE BACKFILLED WITH A ONE SACK CEMENT AND SAND SLURRY MIX. ASPHALT SHALL BE REPLACED ONE INCH THICKER THAN THE PRE-EXISTING A.C. THICKNESS.
2. TRENCHES 2 FEET IN WIDTH OR LESS AND LESS THAN 18 INCHES IN DEPTH SHALL BE BACKFILLED WITH TWO SACK CEMENT AND SAND SLURRY MIX. ASPHALT SHALL BE ONE INCH THICKER THAN THE PRE-EXISTING A.C. THICKNESS.

THE ENTIRE WIDTH OF ALL STREETS THAT ARE TRENCHED SHALL RECEIVE A SLURRY SEAL [CALTRANS TYPE] WITH AN APPLICATION RATE OF TWELVE POUNDS PER SQUARE YARD.

THE CONDITIONS AS STATED ABOVE WILL BE IN ADDITION TO THE STANDARD PLATES COVERING TRENCHES. NO CHANGES WILL BE ALLOWED WITHOUT THE APPROVAL OF THE DIRECTOR OF PUBLIC WORKS.

JAGGED AND/OR ROUGH EDGES ARE TO BE KEPT TO A MINIMUM. THE INSPECTOR SHALL DETERMINE THE NEED FOR ANY ADDITIONAL SAW CUTTING. EXTREME CARE MUST BE EXERCISED IN OLDER ROADS WHERE A/C IS BROKEN UP OR HAS BECOME BRITTLE.

| | | | |
|---|---|---|---|
| City of Simi Valley | VENTURA COUNTY WATERWORKS DISTRICT NO. 8 | | PLATE |
| DEPARTMENT OF PUBLIC WORKS | TRENCH REPAIR WITHIN PAVED RIGHT-OF-WAY | | 25 |
| DISTRICT ENGINEERING | RECOMMENDED: /S/ | APPROVED: /S/ | JUNE 99 |
| | DEPUTY DIR./DISTRICT ENGR. | DIRECTOR OF PUBLIC WORKS | |

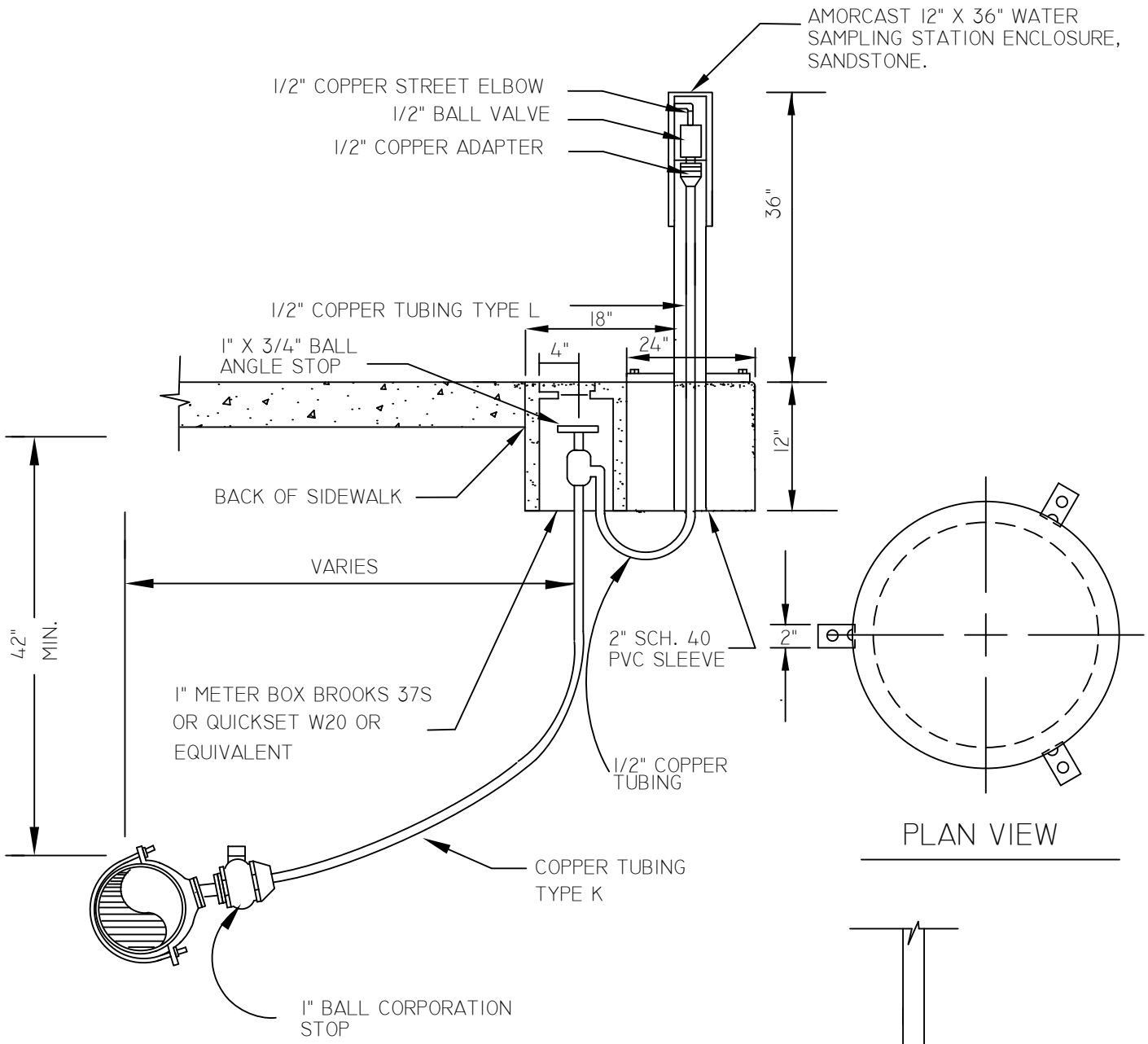


NOTE:

SAMPLING STATION SHALL BE LOCATED BEHIND THE SIDEWALK.

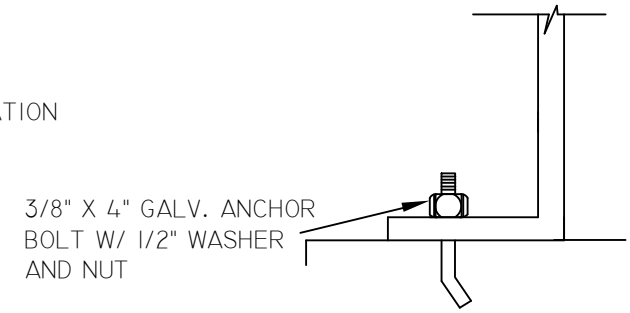


ANCHOR DETAIL

| City of Simi Valley<br>DEPARTMENT OF PUBLIC WORKS | VENTURA COUNTY WATERWORKS DISTRICT NO. 8 | | PLATE |
|---|---|---|---|
| | WATER SAMPLE STATION | | 26 |
| DISTRICT ENGINEERING | RECOMMENDED:<br>/S/<br>ASST. DIRECTOR OF PUBLIC WORKS/DIST. ENGR. | APPROVED:<br>/S/<br>DIRECTOR OF PUBLIC WORKS | MAY 04 |

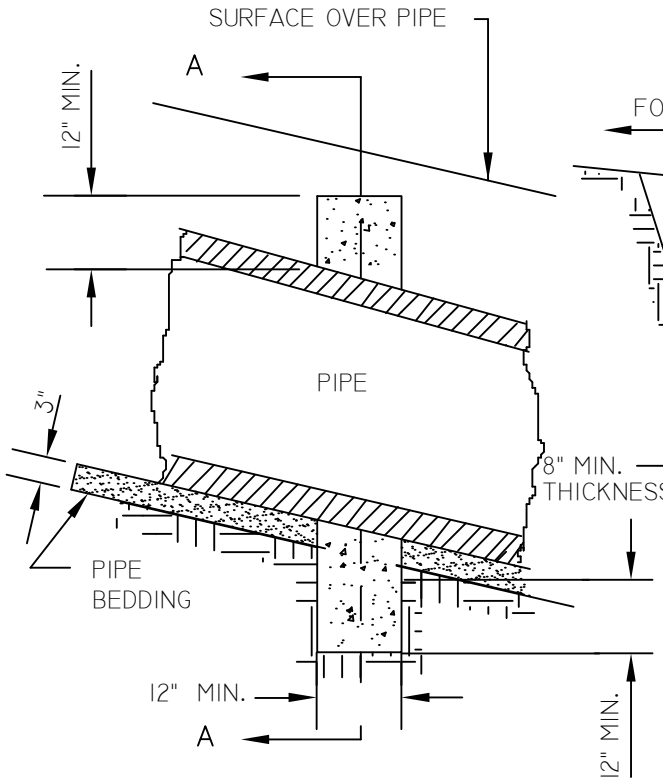


SECTION B-B

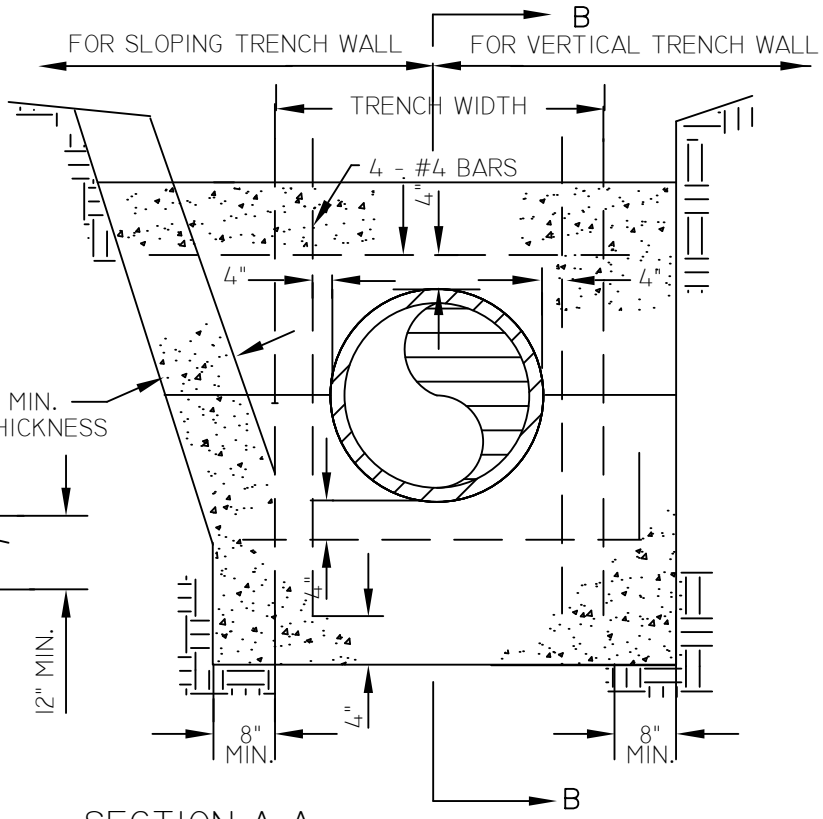


SECTION A-A

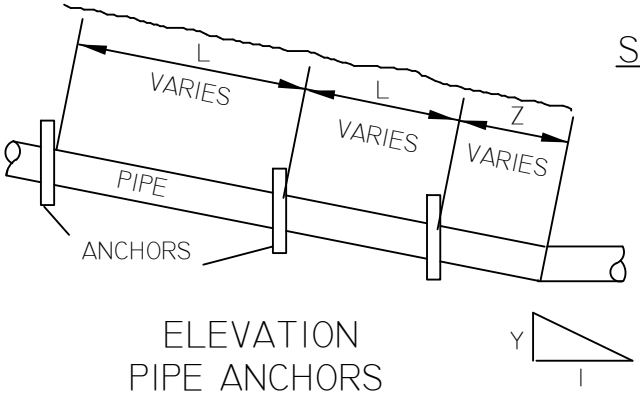


ELEVATION
PIPE ANCHORS

ANCHORS

| PIPE SLOPE [%] Y:1 [100] | L DISTANCE [MAX] | Z DISTANCE [MAX] |
|---|---|---|
| 100 | 12' | 4' |
| 67 | 14' | 8' |
| 50 | 16' | 12' |
| 40 | 18' | 18' |
| 33 | 20' | 20' |

NOTES:

1. ANCHORS SHALL BE CLASS 420-C-2000 CONCRETE.
2. TRENCH SHALL BE BACKFILLED IN ACCORDANCE WITH PLATE 5.
3. SPACING OF ANCHORS FOR PIPE SLOPES BETWEEN VALUES SHOWN IN TABLE "A" MAY BE INTERPOLATED.

| | | |
|---|---|---|
| City of Simi Valley<br>DEPARTMENT OF PUBLIC WORKS | VENTURA COUNTY WATERWORKS DISTRICT NO. 8 | PLATE |
| | PIPE ANCHORS AND BACKFILL STABILIZERS | 27<br>1 OF 2 |
| DISTRICT ENGINEERING | RECOMMENDED: /S/<br>DEPUTY DIR./DISTRICT ENGR. | APPROVED: /S/<br>DIRECTOR OF PUBLIC WORKS | JUNE 99 |

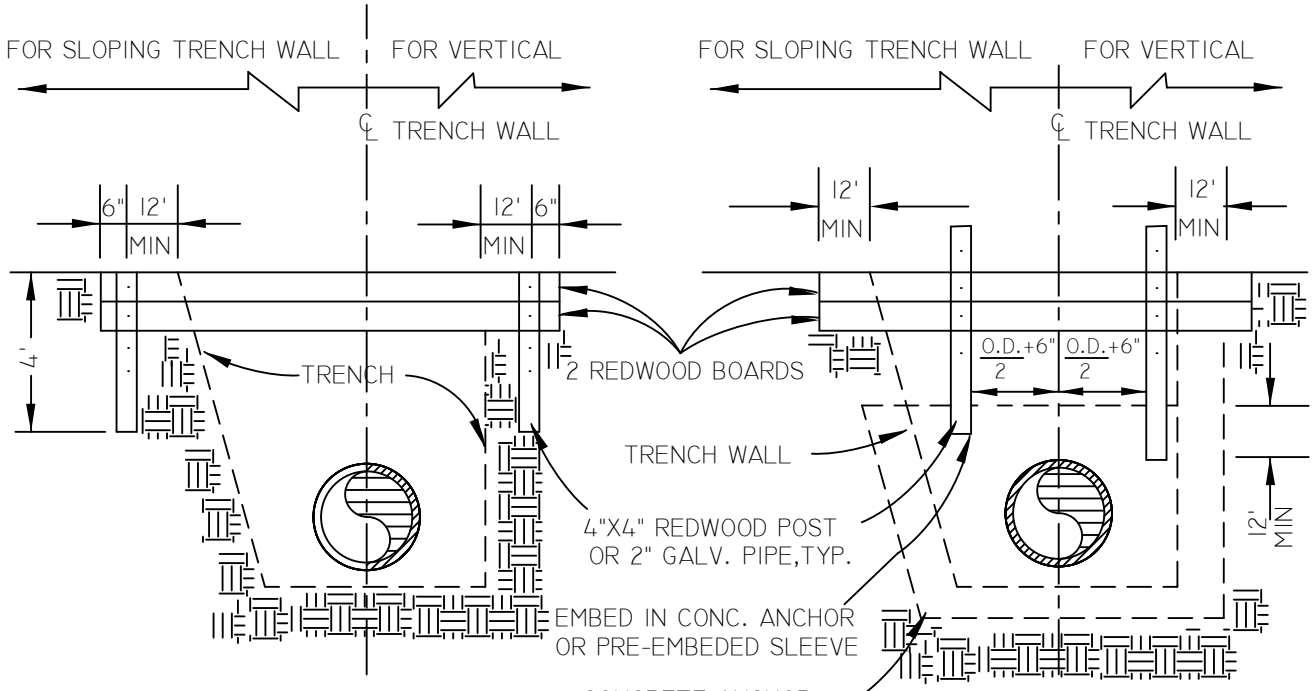


SECTION

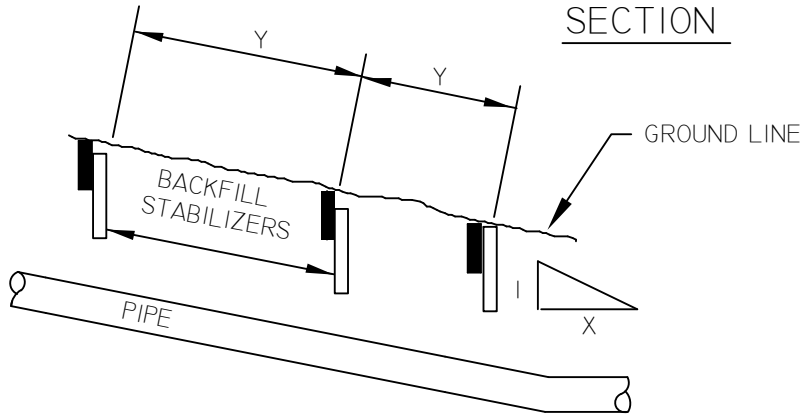


ELEVATION
BACKFILL STABILIZERS

| GROUND SLOPE X:1 | SPACING Y [MAX] |
|---|---|
| 1:1 | 5' |
| 1 1/2:1 | 9' |
| 2:1 | 12' |
| 2 1/2:1 | 18' |
| 3:1 | 20' |

STABILIZERS

NOTES:

1. ANCHORS SHALL BE CLASS 420-C-2000 CONCRETE.
2. TRENCH SHALL BE BACKFILLED PER NOTE 4 ON SHEET 2.
3. SPACING OF ANCHORS FOR PIPE SLOPES BETWEEN VALUES SHOWN IN TABLE "A" MAY BE INTERPOLATED.

| City of Simi Valley<br>DEPARTMENT OF PUBLIC WORKS | VENTURA COUNTY WATERWORKS DISTRICT NO. 8 | | PLATE |
|---|---|---|---|
| | PIPE ANCHORS AND BACKFILL STABILIZERS | | 27<br>2 OF 2 |
| DISTRICT ENGINEERING | RECOMMENDED:<br>/S/<br>DEPUTY DIR./DISTRICT ENGR. | APPROVED:<br>/S/<br>DIRECTOR OF PUBLIC WORKS | JUNE 99 |

# GENERAL NOTES - WATER

1. The water facilities to be constructed shall be in accordance with the Water Design and Construction Standards of the Ventura County Waterworks District No. 8.

2. Forty-eight hours prior to making a tie-in to the existing water system, the Contractor shall notify the Deputy Director / Waterworks Services, at (805) 583-6408. No Tie-Ins shall be commenced or performed without the permission of the Deputy Director / Waterworks Services.

3. Unless otherwise directed by the District Engineer, all valves 10" diameter or smaller, shall be Resilient Seated gate valves. All resilient seated gate valves shall be epoxy coated, with stainless steel nuts and bolts as manufactured by the Clow Corporation, the Muller Company, the American Water Company, or approved equal.

4. All valves 12" diameter and larger, shall be butterfly valves conforming to AWWA C-504, latest edition except that the valve shaft shall be a one piece unit extending completely through the valve disc, 18-8 stainless steel Type 304. All butterfly valves shall have a two part 100 percent solids catalytically setting epoxy lining manufactured for potable water service. Acceptable manufacturers are Pratt Groundhog, or approved equal.

5. For all service connections the Contractor shall install a ball valve corporation stop, ball valve angle stop (same size as meters), ball customer hand valve and a one-inch Copper water service with a meter box with touch read lids. Meter boxes shall be Composite Model 37S or approved equal with Touch Read lids (composite). The final service locations shall be shown on the "Record Plans" by the Developer's Engineer prior to acceptance by the District.

6. All water meters will be furnished and installed by Ventura County Waterworks District No. 8 upon application and payment of applicable fees prior to landscape and occupancy. Contractor shall furnish and install meter box and standard house connection per standard drawing.

7. Meter boxes are to be located adjacent to the curb (see Note #16). No meter boxes are to be set in driveways or in planters. Within water line easements, meter boxes shall be installed within the easement. Hose bibs shall not be installed above the meter boxes.

8. All water line elevations shown on plans are top of pipe unless otherwise noted.

9. The Contractor shall verify and protect in place all existing underground structures. Any damage to existing underground structures shall be immediately repaired at no cost to the District.

10. Stationing is based on water pipeline centerline and not street centerline.

11. The Contractor shall salvage all approved fittings to be removed and deliver them undamaged to the District's yard (2799 Walnut Avenue, Simi Valley) at no cost to the District.

| | | | |
|---|---|---|---|
| City of Simi Valley<br>DEPARTMENT OF PUBLIC WORKS | VENTURA COUNTY WATERWORKS DISTRICT NO. 8 | | PLATE<br>28<br>1 OF 2 |
| | GENERAL NOTES - WATER | | |
| DISTRICT ENGINEERING | RECOMMENDED:<br>/S/<br>DEPUTY DIR./DISTRICT ENGR. | APPROVED:<br>/S/<br>DIRECTOR OF PUBLIC WORKS | JUNE 99 |

12. All PCV or non conductive water mains shall have 12 gage insulated copper wire. Wire shall be looped in valve stacks and extended to finish grade.

13. Approval of plans effective for two (2) years after date of signature by the District Engineer.

14. All service saddles shall be double strap bronze for A.C.P. and stainless steel for C900 PVC pipe. Saddles shall be Ford-202-BS-IP, Jones-J969 or approved equal. Substitutes may only be used upon approval by the Deputy Director / Waterworks Services.

15. Contractor shall be responsible for metering and paying for all water used during construction. Prior to start of construction, payment corresponding to three times the calculated volume of water contained within the newly-installed water mains shall be paid to account for testing, chlorinating, and flushing. The calculated volume of the newly installed water mains is _____.

16. Residential water services and meter boxes are to be located within one foot of the property corner directly behind the curb and location of service is to be permanently marked on top of the curb with a "W". Where this is not possible, alternate locations shall be used subject to acceptance by Inspector. Under no circumstances shall the meter be placed in a driveway. In all cases there shall be a minimum separation of 10 ft. between water services and sewer laterals. There shall also be a minimum separation of 5 ft. between the center of the street tree and the nearest edge of the meter box.

17. Failure by the Contractor to submit shop drawings or installation of unacceptable components may require removal of non-complying components and replacement with acceptable components at no cost to the District.

18. Prior to connection to the District's water system, contractor shall pressure test and disinfect all newly constructed facilities in accordance with District requirements and AWWA standards and pass a Bacteria contamination test. All disinfection and Bacteria testing shall be under the observation of the District Representative.

19. All disinfection work shall be performed by personnel certified by the California department of health services in accordance with chapter 9, division 5 of the health and safety code and district standards. Prior to the commencement of construction, the contractor shall provide a disinfection plan to the District for review and approval by the District Engineer. A copy of the certificate shall be provided to the District Engineer prior to the commencement of disinfection.

# CITY OF SIMI VALLEY
# VENTURA COUNTY WATERWORKS DISTRICT NO. 8
# ESTIMATE OF COSTS

DESCRIPTION _____ PROJECT _____

LOCATION _____ DATE _____

## WATER SYSTEM IMPROVEMENTS

| ITEM | QUANTITY | UNIT | UNIT COST | ITEM COST |
|---|---|---|---|---|
| 1. 16" P.V.C PIPE | | LN FT | 65.00 | |
| 2. 14" P.V.C. PIPE | | LN FT | 62.00 | |
| 3. 12" P.V.C. PIPE | | LN FT | 33.00 | |
| 4. 10" P.V.C. PIPE | | LN FT | 28.00 | |
| 5. 8" P.V.C. PIPE | | LN FT | 22.00 | |
| 6. 6" P.V.C. PIPE | | LN FT | 18.00 | |
| 7. 16" DUCTILE IRON PIPE | | LN FT | 83.00 | |
| 8. 14" DUCTILE IRON PIPE | | LN FT | 74.00 | |
| 9. 12" DUCTILE IRON PIPE | | LN FT | 49.00 | |
| 10. 10" DUCTILE IRON PIPE | | LN FT | 46.00 | |
| 11. 8" DUCTILE IRON PIPE | | LN FT | 30.00 | |
| 12. 6" DUCTILE IRON PIPE | | LN FT | 27.00 | |
| 13. 16" STEEL PIPE | | LN FT | 127.00 | |
| 14. 14" STEEL PIPE | | LN FT | 112.00 | |
| 15. 12" STEEL PIPE | | LN FT | 93.00 | |
| 16. 10" STEEL PIPE | | LN FT | 82.00 | |
| 17. 8" STEEL PIPE | | LN FT | 65.00 | |
| 18. 6" STEEL PIPE | | LN FT | 45.00 | |
| 19. 16" VALVE (IN PLACE) | | EACH | 2,558.00 | |
| 20. 14" VALVE (IN PLACE) | | EACH | 1,234.00 | |
| 21. 12" VALVE (IN PLACE) | | EACH | 1,481.00 | |
| 22. 10" VALVE (IN PLACE) | | EACH | 1,234.00 | |
| 23. 8" VALVE (IN PLACE) | | EACH | 1,047.00 | |
| 24. 6" VALVE (IN PLACE) | | EACH | 937.00 | |
| 25. 14" BUTTERFLY VALVE (IN PLACE) | | EACH | 1,506.00 | |
| 26. 12" BUTTERFLY VALVE (IN PLACE) | | EACH | 1,289.00 | |
| 27. FIRE HYDRANT ASSEMBLY | | EACH | 2,691.00 | |
| 28. 2" AIR & VACUUM RELIEF VALVE ASSEMBLY | | EACH | 2,367.00 | |
| 29. 1" AIR & VACUUM RELIEF VALVE ASSEMBLY | | EACH | 813.00 | |
| 30. COMBO. AIR & VACUUM W/2" B.O. | | EACH | 2,689.00 | |

PREPARED BY: _____

CHECKED BY: _____

APPROVED BY: _____

SUBTOTAL $ _____

15% CONTINGENCY _____

TOTAL $_____

GRAND TOTAL (SHEETS 1 & 2) $ _____

| | | | |
|---|---|---|---|
| City of Simi Valley<br>DEPARTMENT OF PUBLIC WORKS | VENTURA COUNTY WATERWORKS DISTRICT NO. 8 | | PLATE |
| | UNIT COSTS FOR ESTIMATING | | 29<br>1 OF 2 |
| DISTRICT ENGINEERING | RECOMMENDED:<br>/S/<br>DEPUTY DIR./DISTRICT ENGR. | APPROVED:<br>/S/<br>DIRECTOR OF PUBLIC WORKS | JUNE 99 |

# CITY OF SIMI VALLEY
# VENTURA COUNTY WATERWORKS DISTRICT NO. 8
# ESTIMATE OF COSTS

DESCRIPTION _____ PROJECT _____

LOCATION _____ DATE _____

## WATER SYSTEM IMPROVEMENTS

| | ITEM | QUANTITY | UNIT | UNIT COST | ITEM COST |
|---|---|---|---|---|---|
| 31. | TEMPORARY BLOW OFF | | EACH | 937.00 | |
| 32. | PERMANENT BLOW OFF | | EACH | 1,803.00 | |
| 33. | 16" HOT TAP ASSEMBLY | | EACH | 6,456.00 | |
| 34. | 14" HOT TAP ASSEMBLY | | EACH | 5,917.00 | |
| 35. | 12" HOT STOP ASSEMBLY | | EACH | 5,056.00 | |
| 36. | 10" HOT TAP ASSEMBLY | | EACH | 3,983.00 | |
| 37. | 8" HOT ASSEMBLY | | EACH | 3,228.00 | |
| 38. | 6" HOT TAP ASSEMBLY | | EACH | 2,045.00 | |
| 39. | 8" WATER SERVICE | | EACH | 4,064.00 | |
| 40. | 6" WATER SERVICE | | EACH | 3,485.00 | |
| 41. | 4" WATER SERVICE | | EACH | 2,558.00 | |
| 42. | 3" WATER SERVICE | | EACH | 1,979.00 | |
| 43. | 2" WATER SERVICE | | EACH | 1,096.00 | |
| 44. | 1 1/2" WATER SERVICE | | EACH | 1,096.00 | |
| 45. | 1" WATER SERVICE | | EACH | 525.00 | |
| 46. | 3/4" METER | | EACH | 145.00 | |
| 47. | 1" METER | | EACH | 176.00 | |
| 48. | 2" METER | | EACH | 559.00 | |
| 49. | CONCRETE ENCASEMENT | | LN FT | 145.00 | |
| 50. | TRENCH SAFETY | | LUMP SUM | BY ESTIMATOR | |
| 51. | FITTINGS | | LUMP SUM | BY ESTIMATOR | |
| 52. | WATER SAMPLE STATION | | EACH | 585.00 | |
| 53. | REMOVE AND REPLACE A.C. & BASE | | SQ FT | 5.80 | |
| 54. | INCREASE PIPELINE CONSTRUCTION COSTS WHEN IN EXISTING STREET | | LN FT | 25% | |
| 55. | WHEN ONE SACK CEMENT SLURRY BACKFILL REQUIRED, ADD FOR PIPE | | LN FT | 64.00 | |
| 56. | PUMP STATION | | LUMP SUM | BY ESTIMATOR | |
| 57. | WATER STORAGE TANK | | GAL | .50 | |
| 58. | 8" CONTROL VALVE STATION | | EACH | BY ESTIMATOR | |
| 59. | 12" CONTROL VALVE STATION | | EACH | BY ESTIMATOR | |
| 60. | 16" CONTROL VALVE STATION | | EACH | BY ESTIMATOR | |

PREPARED BY: _____

CHECKED BY: _____

APPROVED BY: _____

SUBTOTAL $ _____

15% CONTINGENCY _____

TOTAL $_____

GRAND TOTAL (SHEETS 1 & 2) $ _____

| | | |
|---|---|---|
| City of Simi Valley<br>DEPARTMENT OF PUBLIC WORKS | VENTURA COUNTY WATERWORKS DISTRICT NO. 8 | PLATE |
| | UNIT COSTS FOR ESTIMATING | 29<br>2 OF 2 |
| DISTRICT ENGINEERING | RECOMMENDED: /S/<br>DEPUTY DIR./DISTRICT ENGR. | APPROVED: /S/<br>DIRECTOR OF PUBLIC WORKS |
| | | JUNE 99 |